Listing and Technical Evaluation Report™

A Duly Authenticated Report from an Approved Agency

Report No: 1202-12

Issue Date: August 27, 2012

Revision Date: March 5, 2026

Subject to Renewal: April 1, 2027

GCT Insulated Concrete Panel Design Properties and Allowable Loads for Use as Floors, Walls, and Roofs Within Building Systems

Trade Secret Report Holder:

Gulf Concrete Technology

Phone: 866-936-6416

Website: structuralpanelsgct.com

CSI Designations:

DIVISION: 03 00 00 - CONCRETE

Section: 03 11 00 - Concrete Forming

Section: 03 11 19 - Insulating Concrete Forming

Section: 03 21 00 - Reinforcement Bars

Section: 03 31 16 - Lightweight Structural Concrete

Section: 03 37 00 - Specialty Placed Concrete

DIVISION: 07 00 00 - THERMAL AND MOISTURE PROTECTION

Section: 07 21 00 - Thermal Insulation

1 Innovative Products Evaluated[1]

1.1 GCT Insulated Concrete Panels:

1.1.1 PSM Series Wall Panels

1.1.2 PSM Series Slabs

1.1.3 PSG Series Slabs

1.1.4 SMP 80 Slab

Digitally signed by RYAN J DEXTER
Date: 2026.03.11 11:16:20 -04'00'

DrJ Engineering, LLC

Certificate of Authorization

#29766

3/11/2026

2 Product Description and Materials

2.1 The innovative products evaluated in this report are shown in **Figure 1** through **Figure 7**.

2.2 GCT Insulated Concrete Panels are prefabricated lightweight structural elements consisting of an Expanded Polystyrene (EPS) core sandwiched between two layers of galvanized steel welded wire mesh.

2.2.1 A steel wire connector is pierced completely through the EPS core and welded to each of the outer layers of galvanized steel welded wire mesh.

2.2.2 Deformed steel reinforcement bars are used where needed.

2.2.3 A high-strength mortar achieving 4,000 psi at 28 days is sprayed onto each side of the panels in the field at the jobsite to create monolithic wall, wall/slab, and wall/roof concrete elements.

2.2.4 Application equipment designed specifically for the application of mortar mixes is highly recommended.

Information contained in this report was developed using report holder's confidential intellectual property (IP) and trade secrets (TS), which is protected by Defend Trade Secrets Act 2016, © DrJ Engineering, LLC

2.3 GCT Insulated Concrete Panels designated PSM consist of a single layer of wire mesh on each side of an EPS core varying from 1.6" up to 10" in thickness. A typical section configuration is shown in **Figure 1**.

2.3.1 A minimum of 0.75" of mortar cover is required over the outer face of the wire mesh on each side, resulting in an average of 1.4" thick mortar cover on each side of the panel.

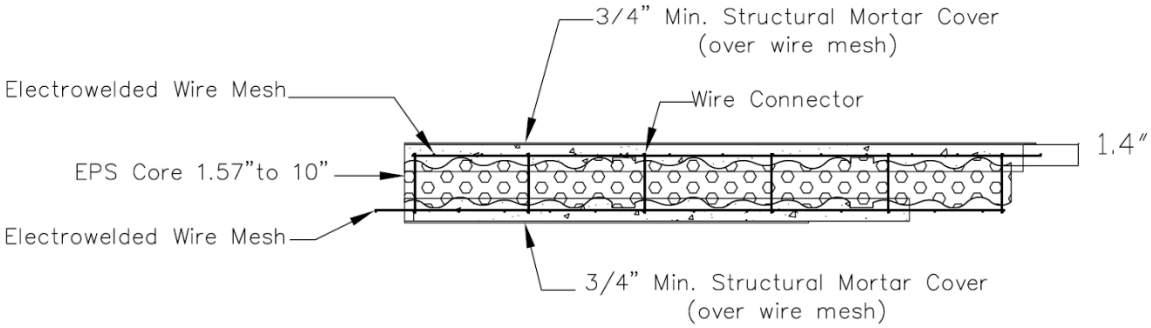

Figure 1. PSM Wall Section

2.4 GCT Insulated Concrete Panels for floor, slab, or roof, and designated PSM Slab, consist of an EPS core varying from 3" up to 10" in thickness. A typical section configuration is shown in **Figure 2**.

2.4.1 Working as floor, slabs, or a roof system, the upper side is poured with a concrete layer (3,500 psi) and will be 2.4" thick with at least 2" over the wire mesh.

2.4.2 The lower side of the section requires a minimum of 0.75" of mortar cover under the outer face of the wire mesh for a total average depth of 1.4".

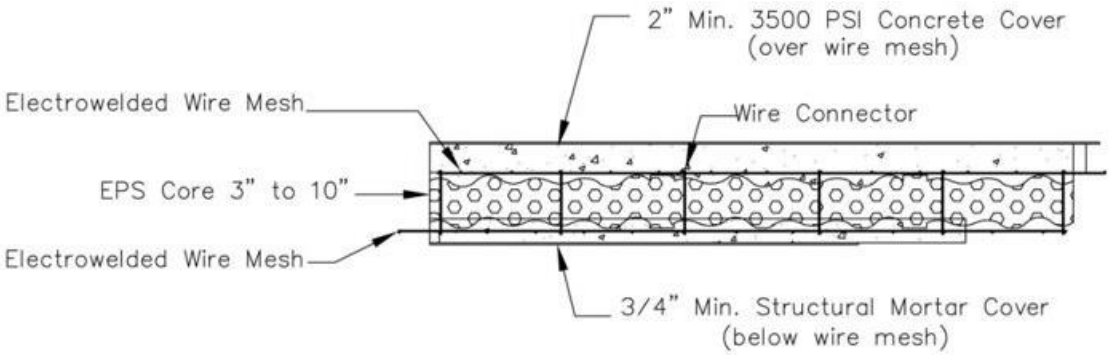

Figure 2. PSM Slab Section

2.5 GCT Insulated Concrete Panels for floor, slab, or roof, and designated as PSM Slab 2 are the standard PSM Slab section with a double layer of reinforcing wire mesh on the bottom face of the slab panel.

2.5.1 The double layer of mesh is offset to ensure all wires have a full bond with the structural mortar.

2.5.2 Working as floor slabs or a roof system, the upper side is poured with a concrete layer (3,500 psi) and will be 2.4" thick with at least 2" over the wire mesh.

2.5.3 The lower side of the section requires a minimum of 0.75" of mortar cover under the bottom face of the wire mesh for a total average depth of 1.4".

Information contained in this report was developed using report holder's confidential intellectual property (IP) and trade secrets (TS), which is protected by Defend Trade Secrets Act 2016, © DrJ Engineering, LLC

2.6 GCT Insulated Concrete Panels for floor, slab, or roof, and designated PSG2, consist of EPS cores with voids to form two (2) concrete joists for every 4' of width. A typical section configuration is shown in **Figure 3**.

2.6.1 The joist depth will vary from 4" to 10", according to the structural requirements.

2.6.2 The upper side is poured with a concrete layer (3,500 psi) and will be 2.4" thick with at least 2" over the wire mesh.

2.6.3 The lower side of the section requires a minimum of 0.75" of mortar cover under the outer face of the wire mesh for a total average depth of 1.4".

2.6.4 In addition, a minimum of two (2) #4 rebar are placed on the tension (lower) side of each concrete joist.

2.6.5 When required by the building design, rebar is placed in the top concrete layer.

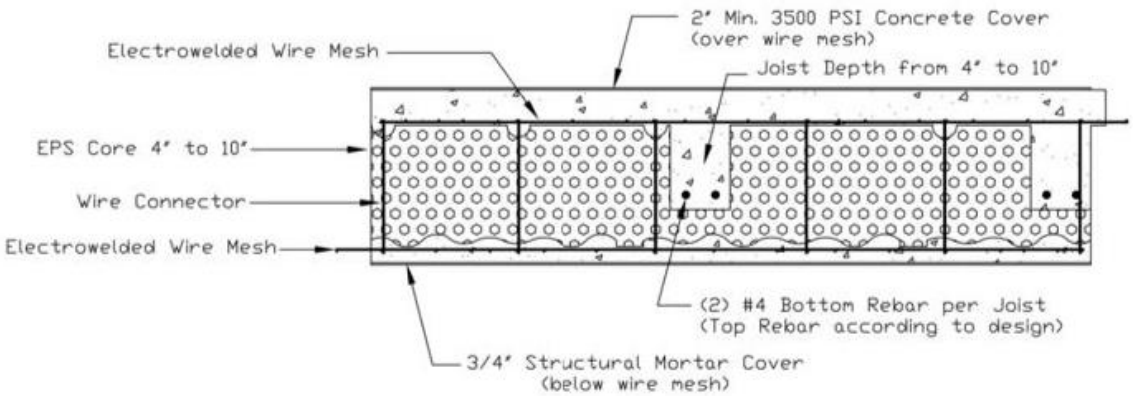

Figure 3. PSG2 Slab Section

2.7 GCT Insulated Concrete Panels for floor, slab, or roof, and designated PSG3, consist of EPS cores with voids to form three (3) concrete joists for every 4' of width. A typical section configuration is shown in **Figure 4**.

2.7.1 The joist depth will vary from 4" to 10", according to the requirements.

2.7.2 The upper side is poured with a concrete layer (3,500 psi) and will be 2.4" thick with at least 2" over the wire mesh.

2.7.3 The lower side of the section requires a minimum of 0.75" of mortar cover under the outer face of the wire mesh for a total average depth of 1.4".

2.7.4 In addition, a minimum of two (2) #4 rebar are placed on the tension (lower) side of each concrete joist.

2.7.5 When required by the building design, rebar is placed in the top concrete layer.

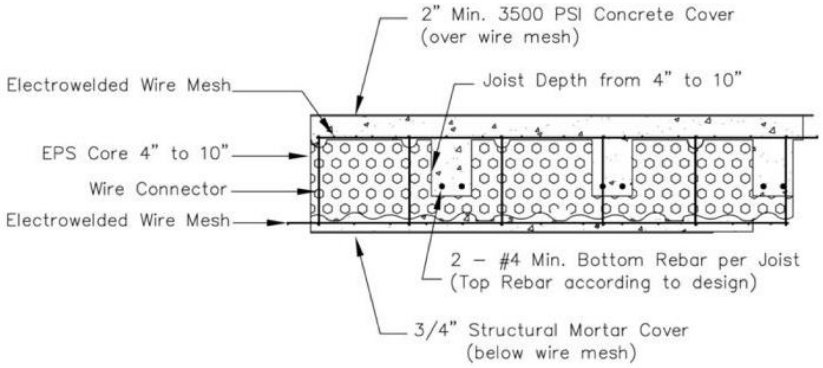

Figure 4. PSG3 Slab Section

Information contained in this report was developed using report holder's confidential intellectual property (IP) and trade secrets (TS), which is protected by Defend Trade Secrets Act 2016, © DrJ Engineering, LLC

2.8 GCT floor and roof panels, designated PSG6, consist of EPS cores with voids to form six (6) concrete joists for every 4' of width. A typical section configuration is shown in **Figure 5**.

2.8.1 According to the requirements, the joist depth will vary from 4" to 10".

2.8.2 The upper side is poured with a concrete layer (3,500 psi) and will be 2.4" thick with at least 2" over the wire mesh.

2.8.3 The lower side of the section requires a minimum of 0.75" of mortar cover under the outer face of the wire mesh for a total average depth of 1.4".

2.8.4 In addition, a minimum of two (2) #4 rebar are placed on the tension (lower) side of each concrete joist.

2.8.5 When required by the building design, rebar is placed in the top concrete layer.

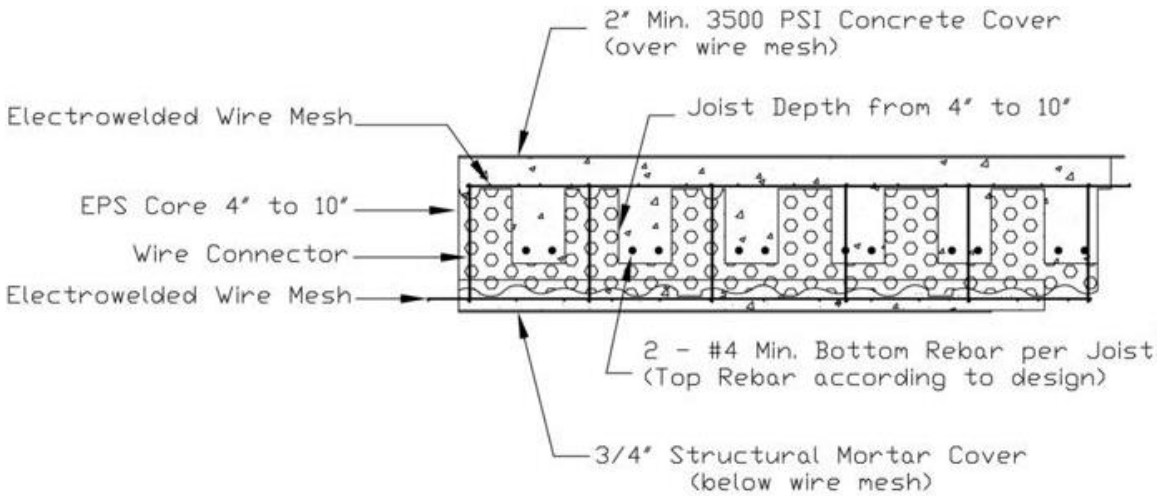

Figure 5. PSG6 Slab Section

2.9 GCT slabs designated SMP80 Slab consist of a single layer of wire mesh on each side of an EPS core. The wire mesh on each face of the panel is connected with double wire mesh connectors along the length. A typical configuration is shown in **Figure 6**.

2.9.1 Working as floor slabs or a roof system, the upper side is poured with a concrete layer (3,500 psi) and will be 2.4" thick with at least 2" over the wire mesh.

2.9.2 The lower side of the section requires a minimum of 0.75" of mortar cover under the outer face of the wire mesh for a total average depth of 1.4".

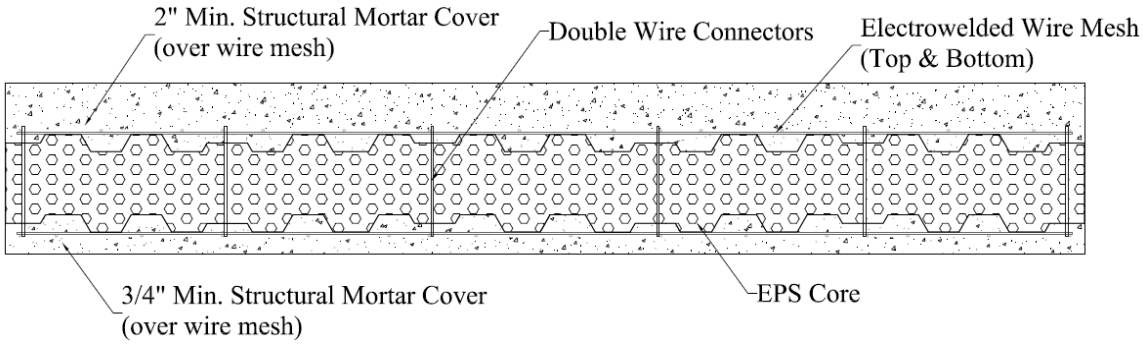

Figure 6. SMP80 Slab Section

Information contained in this report was developed using report holder's confidential intellectual property (IP) and trade secrets (TS), which is protected by Defend Trade Secrets Act 2016, © DrJ Engineering, LLC

2.10 GCT Insulated Concrete Panels consisting of an EPS core and galvanized wire mesh are prefabricated and delivered to the jobsite where they are installed. The high-strength mortar and concrete are then applied at the jobsite, as shown in **Figure 7**.

Figure 7. Photos of GCT Insulated Concrete Panels on Site

2.11 GCT Insulated Concrete Panels for wall, floor, and roofs have the thicknesses and self-weights provided in **Table 1**, **Table 2**, and **Table 3**.

Table 1. GCT Insulated Concrete Panels Thickness and Self Weight

GCT Panel Type	Wire-to-Wire Panel Thickness (in)	Finish Panel Thickness (in)	Self-Weight (psf)
PSM60	3.20	4.90	35
PSM80	4.00	5.65	35
PSM100	4.70	6.40	35
PSM120	5.50	7.20	35
PSM140	6.25	7.95	35
PSM160	7.00	8.70	35
PSM190	8.40	10.10	35
PSM240	10.43	12.13	35
SI: 1 in = 25.4 mm, 1 lb = 4.45 N			

Information contained in this report was developed using report holder's confidential intellectual property (IP) and trade secrets (TS), which is protected by Defend Trade Secrets Act 2016, © DrJ Engineering, LLC

Table 2. GCT Wire Mesh Accessory Specifications

Wire Mesh Type	Width (in)[1]	Height (in)[2]	Weight per Unit (lb)	Length (ft)	Area (ft^2/Unit)
RG2 Flat Mesh	15.00	-	1.50	4	5.00
RG1 Corner Mesh	7.00	7	1.40	4	4.67
RGU U35/40 Mesh	2.36	7	1.64	4	5.45
RGU U75 Mesh	4.13	7	1.81	4	6.04
RGU U80 Mesh	4.33	7	1.83	4	6.11
RGU U100 Mesh	5.12	7	1.91	4	6.37
RGU U120 Mesh	5.91	7	1.99	4	6.64
RGU U140 Mesh	6.69	7	2.07	4	6.90
RGU U160 Mesh	7.48	7	2.15	4	7.19
RGU U190 Mesh	8.66	7	2.27	4	7.55
RGU U240 Mesh	10.63	7	2.46	4	8.21
Splice Mesh	1.00	-	0.30	1	0.08

SI: 1 in = 25.4 mm, 1 lb = 4.45 N

1. Mesh width is measured along thickness of panel.
2. Mesh height is measured along panel length.

Information contained in this report was developed using report holder's confidential intellectual property (IP) and trade secrets (TS), which is protected by Defend Trade Secrets Act 2016, © DrJ Engineering, LLC

Table 3. GCT Insulated Concrete Floor and Roof Panel Thickness and Self-Weight

GCT Panel Type	Wire-to-Wire Panel Thickness (in)	Finish Panel Thickness (in)	Self-Weight (psf)
PSM80-Slab	4.00	6.90	51
SMP80-Slab	4.00	7.40	51
PSM100-Slab	4.70	7.65	51
PSM120-Slab	5.50	8.45	51
PSM140-Slab	6.25	9.20	51
PSM160-Slab	7.00	9.95	51
PSM190-Slab	8.40	11.35	51
PSM240-Slab	10.43	13.50	51
PSG2-100	6.00	8.75	51
PSG2-140	7.60	10.35	55
PSG2-160	8.35	11.10	57
PSG2-200	9.95	12.70	60
PSG2-240	11.50	14.25	64
PSG3-100	6.00	8.75	56
PSG3-140	7.60	10.35	61
PSG3-160	8.35	11.10	63
PSG3-200	9.95	12.70	68
PSG3-240	11.50	14.25	74
PSG6-100	6.00	8.75	69
PSG6-140	7.60	10.35	79
PSG6-160	8.35	11.10	84
PSG6-200	9.95	12.70	93
PSG6-240	11.50	14.25	106
PSG6-100R	11.50	14.25	69
PSG6-140R	11.50	14.25	79
PSG6-160R	11.50	14.25	84
PSG6-200R	11.50	14.25	93
SI: 1 in = 25.4 mm, 1 lb = 4.45 N			

Information contained in this report was developed using report holder's confidential intellectual property (IP) and trade secrets (TS), which is protected by Defend Trade Secrets Act 2016, © DrJ Engineering, LLC

2.12 *Material*

2.12.1 *EPS Core:*

2.12.1.1 The EPS foam core is made up of Type I EPS foam boards conforming to ASTM C578.

2.12.1.2 The EPS core is molded into proprietary shapes, which vary, depending on the intended application (e.g., wall, floor, or roof application).

2.12.1.3 The EPS core thickness varies depending on the application, as described in **Section 2.2** through **Section 2.10**.

2.12.1.4 The EPS core has the following characteristics:

2.12.1.4.1 Minimum Density: 0.9 lb/cf

2.12.1.4.2 Flame Spread Index: 25 or less

2.12.1.4.3 Smoke Developed Index:[2] 450 or less

2.12.2 *Steel Welded Wire Mesh:*

2.12.2.1 The galvanized steel welded wire mesh is made from steel with minimum fracture of 95 ksi and complies with ACI 318-19 Section 20.2.1.7 and IBC Section 1903.

2.12.2.2 Longitudinal or principal direction wires are 3.0 mm (11-gauge) in thickness and have an equivalent spacing of 3.0" o.c.

2.12.2.3 Transverse or secondary direction wires are 2.5 mm (12.5-gauge) in thickness and have a uniform spacing of 2.6" o.c.

2.12.2.4 The front and back wire mesh layers are tied together along the longitudinal direction in six (6) rows with 3.0 mm (11-gauge) wire.

2.12.3 *Other Reinforcement:*

2.12.3.1 Where required, deformed steel reinforcement bars are used, which have a minimum yield stress of 60 ksi and comply with ACI 318-19 Section 20.2.1.3 and IBC Section 1903.

2.12.4 *Mortar Application:*

2.12.4.1 For application on the GCT Insulated Concrete Panels, Carmelo Structural Mortar Mix 4000 PSI is recommended because it has a compressive strength of 4,000 psi.

2.12.4.1.1 Other structural mortar mixes may be used if they provide strength and stiffness that are at least equivalent to the Carmelo Structural Mortar Mix as described in **Section 2.12.4.5.2**.

2.12.4.2 Carmelo Structural Mortar Mix is a single component Portland cement-based plaster containing additives to enhance its bonding strength.

2.12.4.3 The mortar contains micro-spheres with pozzolanic action to make it less permeable, in addition to making it easy to place and finish.

2.12.4.4 Low-pressure mortar application equipment is highly recommended for speed, quality, and consistency.

2.12.4.5 The mortar used must have the following characteristics:

2.12.4.5.1 Must comply with ASTM C387

2.12.4.5.2 Minimum compressive strength of 4,000 psi at 28 days according to ASTM C387

2.12.4.5.3 Maximum aggregate size: $^{3}/_{16}$"

2.12.4.5.4 Aggregate must conform to ACI 506R-05 Table 1.1

Information contained in this report was developed using report holder's confidential intellectual property (IP) and trade secrets (TS), which is protected by Defend Trade Secrets Act 2016, © DrJ Engineering, LLC

2.12.5 *Concrete:*

2.12.5.1 The placed concrete must be a normal weight complying with IBC Chapter 19 and have the following characteristics:

2.12.5.1.1 Minimum compressive strength of 3,500 psi at 28 days according to ASTM C387

2.12.5.1.2 Slump: minimum 2"

2.12.5.1.3 Maximum aggregate size: $^1/_2$"

2.13 *Material Properties*

2.13.1 GCT Insulated Concrete Panels for wall and floor have the material properties provided in **Table 4** and **Table 5**.

Table 4. Material Properties for GCT Insulated Concrete Panels

Panel Type	Gross Section Bending Stiffness, EI (lb-in^2/ft of Panel Width)	Cracked Section Bending Stiffness, EI (lb-in^2/ft of Panel Width)	Cracking Moment, M_{cr} (ft.-lb/ft of Panel Width)	Nominal Flexural Strength, M_n (ft-lb/ft of Panel Width)	Nominal Shear Strength, V_n (lb/Q) (lb/ft of Panel Width)	Axial Stiffness, EA (lb/ft of Panel Width)	Nominal Compressive Strength, P_n (lb/ft of Panel Width)
PSM60	68,000,000	5,600,000	500	1,520	4,129	65,280,000	38,150
PSM80	97,000,000	8,000,000	600	1,810	4,129	65,280,000	38,150
PSM100	119,000,000	9,900,000	700	2,000	4,129	65,280,000	38,150
PSM120	154,000,000	12,700,000	800	2,270	4,129	65,280,000	38,150
PSM140	212,000,000	17,500,000	1,000	2,650	4,129	65,280,000	38,150
PSM160	261,000,000	21,500,000	1,300	2,930	4,129	65,280,000	38,150
PSM190	337,000,000	27,900,000	1,400	3,330	4,129	65,280,000	38,150
PSM240	503,000,000	41,500,000	1,700	4,040	4,129	65,280,000	36,700
SI: 1 in = 25.4 mm, 1 lb = 4.45 N							

Information contained in this report was developed using report holder's confidential intellectual property (IP) and trade secrets (TS), which is protected by Defend Trade Secrets Act 2016, © DrJ Engineering, LLC

Table 5. Material Properties for GCT Insulated Concrete Floor and Roof Panels

Panel Type	Gross Section Bending Stiffness, EI (lb-in²/ft of Panel Width)	Cracked Section Bending Stiffness, EI (lb-in²/ft of Panel Width)	Cracking Moment, M_{cr} (ft-lb/ft of Panel Width)	Nominal Flexural Strength, M_n (ft-lb/ft of Panel Width)	Nominal Shear Strength, V_n (lb/Q) (lb/ft of Panel Width)
PSM80-Slab	274,000,000	16,000,000	1,250	2,255	5,635
PSM80-Slab-2				4,470	
PSM100-Slab	325,000,000	19,000,000	1,400	2,450	5,635
PSM100-Slab-2				4,860	
PSM120-Slab	402,000,000	24,000,000	1,600	2,715	5,635
PSM120-Slab-2				5,395	
PSM140-Slab	525,000,000	32,000,000	1,900	3,095	5,635
PSM140-Slab-2				6,155	
PSM160-Slab	627,000,000	38,000,000	2,300	3,380	5,635
PSM160-Slab-2				6,720	
PSM190-Slab	785,000,000	48,000,000	2,500	3,775	5,635
PSM190-Slab-2				7,510	
PSM240-Slab	1,142,000,000	69,000,000	3,300	4,535	5,635
PSM240-Slab-2				9,030	
PSG2-100	625,000,000	124,000,000	2,400	7,730	3,410
PSG2-140	1,023,000,000	204,000,000	3,400	9,840	3,745
PSG2-160	1,263,000,000	252,000,000	3,800	10,895	4,140
PSG2-200	1,822,000,000	364,000,000	4,600	13,000	4,925
PSG2-240	2,672,000,000	534,000,000	6,500	15,640	5,905
PSG3-100	772,000,000	154,000,000	2,700	10,035	3,735
PSG3-140	1,293,000,000	258,000,000	4,000	12,920	4,725
PSG3-160	1,608,000,000	321,000,000	4,400	14,360	5,220
PSG3-200	2,348,000,000	469,000,000	6,000	17,240	6,210
PSG3-240	3,482,000,000	696,000,000	8,000	20,845	7,445
PSG6-100	1,153,000,000	230,000,000	3,500	16,470	6,050
PSG6-140	2,002,000,000	400,000,000	5,500	21,670	7,655
PSG6-160	2,522,000,000	504,000,000	6,200	24,270	8,460
PSG6-200	3,756,000,000	750,000,000	8,000	29,475	10,065
PSG6-240	5,669,000,000	1,133,000,000	11,000	35,975	12,070
PSG6-100R	1,601,000,000	320,000,000	4,500	18,340	6,050
PSG6-140R	2,342,000,000	468,000,000	5,500	23,005	7,655
PSG6-160R	2,801,000,000	559,000,000	6,500	25,335	8,460
PSG6-200R	3,903,000,000	780,000,000	7,500	30,005	10,065
SI: 1 in = 25.4 mm, 1 lb = 4.45 N					

Information contained in this report was developed using report holder's confidential intellectual property (IP) and trade secrets (TS), which is protected by Defend Trade Secrets Act 2016, © DrJ Engineering, LLC

2.13.2 An effective bending stiffness for calculating deflections of GCT Insulated Concrete Panels can be determined following procedures in ACI 318-19 Section 24.2.3.5.

2.13.3 Additional long-term deflection resulting from creep and shrinkage can be determined by multiplying the immediate deflection due to sustained loads by the factor λΔ (see ACI 318-19 Section 24.2.4.1.1):

Equation 1.

$$\lambda_{\Delta} = \frac{\xi}{1 + 50\rho'}$$

where:

ξ = Time dependent factor for sustained loads = 2.0 (for 5 years or more)

ρ' = Reinforcement ratio for the compression steel

2.13.4 GCT Insulated Concrete Panels may be cambered to reduce the immediate deflection due to dead load and the long-term deflection due to sustained loads.

2.14 As needed, review material properties for design in **Section 6** and the regulatory evaluation in **Section 8**.

3 Definitions[3]

3.1 New Materials[4] are defined as building materials, equipment, appliances, systems, or methods of construction, not provided for by prescriptive and/or legislatively adopted regulations, known as alternative materials.[5] The design strength and permissible stresses shall be established by tests[6] and/or engineering analysis.[7]

3.2 Duly authenticated reports[8] and research reports[9] are test reports and related engineering evaluations that are written by an approved agency[10] and/or an approved source.[11]

3.2.1 This report utilizes intellectual property and/or trade secrets to create public domain material properties for commercial end-use.

3.2.1.1 This report protects confidential Intellectual Property and trade secrets under the regulation, 18.US.Code.90, also known as Defend Trade Secrets Act of 2016 (DTSA).[12]

3.3 An approved agency is *"approved"* when it is ANAB ISO/IEC 17065 accredited. DrJ Engineering, LLC (DrJ) is accredited and listed in the ANAB directory.

3.4 An approved source is *"approved"* when a professional engineer (i.e., Registered Design Professional, hereinafter RDP) is properly licensed to transact engineering commerce. The regulatory authority governing approved sources is the state legislature via its professional engineering regulations.[13]

3.5 Testing and/or inspections conducted for this duly authenticated report were performed by an ISO/IEC 17025 accredited testing laboratory, an ISO/IEC 17020 accredited inspection body, and/or a licensed RDP.

3.5.1 The Center for Building Innovation (CBI) is ANAB[14] ISO/IEC 17025 and ISO/IEC 17020 accredited.

3.6 The regulatory authority shall enforce[15] the specific provisions of each legislatively adopted regulation. If there is a non-conformance, the specific regulatory section and language of the non-conformance shall be provided in writing[16] stating the nonconformance and the path to its cure.

3.7 The regulatory authority shall accept duly authenticated reports from an approved agency and/or an approved source with respect to the quality and manner of use of new materials or assemblies as provided for in regulations regarding the use of alternative materials, designs, or methods of construction.[17]

Information contained in this report was developed using report holder's confidential intellectual property (IP) and trade secrets (TS), which is protected by Defend Trade Secrets Act 2016, © DrJ Engineering, LLC

3.8 ANAB is an International Accreditation Forum (IAF) Multilateral Recognition Arrangement (MLA) signatory. Therefore, recognition of certificates and validation statements issued by conformity assessment bodies accredited by all other signatories of the IAF MLA with the appropriate scope shall be approved.[18] Thus, all ANAB ISO/IEC 17065 duly authenticated reports are approval equivalent,[19] and can be used in any country that is an MLA signatory found at this link: https://iaf.nu/en/recognised-abs/

3.9 Approval equity is a fundamental commercial and legal principle.[20]

4 Applicable Local, State, and Federal Approvals; Standards; Regulations[21]

4.1 *Local, State, and Federal*

4.1.1 Approved in all local jurisdictions pursuant to ISO/IEC 17065 duly authenticated report use, which includes, but is not limited to, the following featured local jurisdictions: Austin, Baltimore, Broward County, Chicago, Clark County, Dade County, Dallas, Detroit, Denver, DuPage County, Fort Worth, Houston, Kansas City, King County, Knoxville, Las Vegas, Los Angeles City, Los Angeles County, Miami, Nashville, New York City, Omaha, Philadelphia, Phoenix, Portland, San Antonio, San Diego, San Jose, San Francisco, Seattle, Sioux Falls, South Holland, St. Louis County, Texas Department of Insurance, and Wichita.[22]

4.1.2 Approved in all state jurisdictions pursuant to ISO/IEC 17065 duly authenticated report use, which includes, but is not limited to, the following featured states: California, Florida, New Jersey, Oregon, New York, Texas, Washington, and Wisconsin.[23]

4.1.3 Approved by the Code of Federal Regulations Manufactured Home Construction: Pursuant to Title 24, Subtitle B, Chapter XX, Part 3282.14[24] and Part 3280[25] pursuant to the use of ISO/IEC 17065 duly authenticated reports.

4.1.4 Approved means complying with the requirements of local, state, or federal legislation.

4.2 *Regulations*

4.2.1 *IBC – 18, 21, 24: International Building Code®*

4.2.2 *IRC – 18, 21, 24: International Residential Code®*

4.2.3 *FBC-B—20, 23: Florida Building Code[26] – Building (FL 30050)*

4.2.4 *FBC-R—20, 23: Florida Building Code[26] – Residential (FL 30050)*

4.2.5 *PRBC—16, 18: Puerto Rico Building Code*

4.3 *Standards*

4.3.1 *ACI 318: Building Code Requirements for Structural Concrete*

4.3.2 *ACI 506R: Guide to Shotcrete*

4.3.3 *ANSI/ASHRAE/IES 90.1: Energy Standard for Buildings Except Low-Rise Residential Buildings*

4.3.4 *ASCE/SEI 7: Minimum Design Loads and Associated Criteria for Buildings and Other Structures*

4.3.5 *ASTM C387: Standard Specification for Packaged, Dry, Combined Materials for Concrete and High Strength Mortar*

4.3.6 *ASTM C578: Standard Specification for Rigid, Cellular Polystyrene Thermal Insulation*

4.3.7 *ASTM D1929: Standard Test Method for Determining Ignition Temperature of Plastics*

4.3.8 *ASTM E72: Standard Test Methods of Conducting Strength Tests of Panels for Building Construction*

4.3.9 *ASTM E84: Standard Test Method for Surface Burning Characteristics of Building Materials*

4.3.10 *ASTM E90: Test Method for Laboratory Measurement of Airborne Sound Transmission Loss of Building Partitions and Elements*

Information contained in this report was developed using report holder's confidential intellectual property (IP) and trade secrets (TS), which is protected by Defend Trade Secrets Act 2016, © DrJ Engineering, LLC

4.3.11 *ICC 500: ICC/NSSA Standard on the Design and Construction of Storm Shelters*

4.3.12 *NIJ Standard 0108.01: National Institute of Justice (NIJ) Standard for Ballistic Resistant Protective Materials*

4.3.13 *TAS 201: Impact Test Procedures*

4.3.14 *TAS 202: Criteria for Testing Impact and Nonimpact Resistant Building Envelope Components Using Uniform Static Air Pressure*

4.3.15 *TAS 203: Criteria for Testing Products Subject to Cyclic Wind Pressure Loading*

4.3.16 *UL 752: Standard for Bullet-Resisting Equipment*

5 Listed[27]

5.1 Equipment, materials, products, or services included in a List published by a nationally recognized testing laboratory (e.g., CBI), an approved agency (e.g., CBI and DrJ), and/or and approved source (e.g., DrJ), or other organization(s) concerned with product evaluation (e.g., DrJ), that maintains periodic inspection (e.g., CBI) of production of listed equipment or materials, and whose listing states either that the equipment or material meets nationally recognized standards or has been tested and found suitable for use in a specified manner.

6 Tabulated Properties Generated from Nationally Recognized Standards

6.1 *Structural Applications*

6.1.1 GCT Insulated Concrete Panels have the allowable axial service load capacity, using the controlling design condition of compressive strength or buckling, as shown in **Table 6**.

Table 6. Allowable Axial Service Load (plf) for Various Wall Heights (ft)[1,2]

GCT Panel Type	Self-Weight (psf)	Allowable Axial Service Load (plf)						
		Wall Height (ft)						
		8	10	12	14	16	18	20
PSM60	35	12,535	8,020	5,570	4,090	3,130	2,475	2,005
PSM80	35	15,500	11,615	8,065	5,925	4,535	3,585	2,900
PSM100	35	15,500	14,540	10,095	7,415	5,675	4,485	3,635
PSM120	35	15,500	15,500	13,225	9,715	7,440	5,875	4,760
PSM140	35	15,500	15,500	15,500	13,530	10,355	8,185	6,630
PSM160	35	15,500	15,500	15,500	15,500	12,835	10,140	8,215
PSM190	35	15,500	15,500	15,500	15,500	15,500	13,240	10,720
PSM240	35	15,500	15,500	15,500	15,500	15,500	15,500	15,500

Values limited by buckling.

Values limited by compressive strength.

SI: 1 in = 25.4 mm, 1 lb/ft = 0.0146 kN/m

1. All loads applied to the wall are considered as live load.
2. The capacities in this table are for pure compression only. Bending moments due to eccentric loads are not considered. See interaction diagrams for combined flexure and axial loads.

Information contained in this report was developed using report holder's confidential intellectual property (IP) and trade secrets (TS), which is protected by Defend Trade Secrets Act 2016, © DrJ Engineering, LLC

6.2 GCT Insulated Concrete Panels have the allowable transverse service (e.g., wind, soil, pressure, etc.) load capacities listed in **Table 7**. The load capacities shown are limited by the controlling design condition of shear strength, bearing strength, bending strength, or deflection at ℓ/240 for walls with brittle finishes.

Table 7. Allowable Transverse Service Load (psf) for GCT Insulated Concrete Wall Panels[1,2,3,4,5]

GCT Panel Type	Self-Weight (psf)	Allowable Transverse Service Load (psf)										
		Wall Height (ft)										
		6	8	10	12	14	16	18	20	24	28	32
PSM60	35	175	90	50	35	25	15	10	10	5	–	–
PSM80	35	200	115	70	45	30	25	20	15	10	5	5
PSM100	35	200	135	80	55	35	25	20	15	10	5	5
PSM120	35	200	160	100	65	45	35	25	20	10	5	5
PSM140	35	200	185	120	80	60	40	30	25	15	10	5
PSM160	35	200	200	130	90	65	50	40	30	20	15	10
PSM190	35	200	200	150	100	75	55	45	35	25	15	10
PSM240	35	200	200	180	125	90	70	55	45	30	20	15

Values limited by flexural capacity.

Values limited by deflection limit.

SI: 1 in = 25.4 mm, 1-psf = 0.0479 kN/m^2

1. Allowable loads in this table are limited to 200-psf. If a greater resistance capacity is needed, please contact Gulf Concrete Technology for professional engineering assistance.
2. The deflection limit is L/240 for walls with brittle finishes per IBC Table 1604.3. Other deflection limits can be provided upon request.
3. All loads applied to the wall are considered as live load.
4. Allowable service loads are calculated by dividing the design strength, φMn, by a load factor of 1.6 according to the load combinations in ACI 318-19 Section 5.3.
5. Assumes that the panel is oriented with the strong axis in the vertical direction.

6.3 GCT Insulated Concrete Panels for floors and roofs have the allowable service live load (e.g., bedroom, office, snow load, etc.) capacities listed in **Table 8**. The load capacities shown are limited by the controlling design condition of shear strength, bearing strength, bending strength, or deflection (minimum code requirement for the floor) at ℓ/360 for live load (LL) and ℓ/240 for total load (TL).

Table 8. Allowable Service Live Load (psf) for GCT Insulated Concrete Floor Panels[1,2,3]

GCT Panel Type	Self-Weight (psf)	Allowable Floor or Roof Service Live Load (psf) for 15-psf of DL and Floor or Roof Deflection Limits of ℓ/360 for LL and ℓ/240 for TL										
		Span Length (ft)										
		6	8	10	12	14	16	18	20	24	28	32
PSM80-Slab	51	200	110	50	20	–	–	–	–	–	–	–
SMP80-Slab	51	200	110	50	20	–	–	–	–	–	–	–

Information contained in this report was developed using report holder's confidential intellectual property (IP) and trade secrets (TS), which is protected by Defend Trade Secrets Act 2016, © DrJ Engineering, LLC

Table 8. Allowable Service Live Load (psf) for GCT Insulated Concrete Floor Panels[1,2,3]

GCT Panel Type	Self-Weight (psf)	Allowable Floor or Roof Service Live Load (psf) for 15-psf of DL and Floor or Roof Deflection Limits of ℓ/360 for LL and ℓ/240 for TL										
		Span Length (ft)										
		6	8	10	12	14	16	18	20	24	28	32
PSM100-Slab	51	200	120	60	25	5	–	–	–	–	–	–
PSM120-Slab	51	200	140	70	35	10	–	–	–	–	–	–
PSM140-Slab	51	200	165	90	45	20	5	–	–	–	–	–
PSM160-Slab	51	200	185	100	55	25	10	–	–	–	–	–
PSM190-Slab	51	200	200	120	65	35	15	–	–	–	–	–
PSM240-Slab	51	200	200	155	90	55	30	10	–	–	–	–
PSG2-100	51	200	200	200	190	125	70	35	10	–	–	–
PSG2-140	55	200	200	200	200	170	120	85	50	5	–	–
PSG2-160	57	200	200	200	200	195	135	95	65	15	–	–
PSG2-200	60	200	200	200	200	200	170	125	90	45	5	–
PSG2-240	64	200	200	200	200	200	200	155	115	60	30	–
PSG3-100	56	200	200	200	200	160	95	50	20	–	–	–
PSG3-140	61	200	200	200	200	200	170	110	70	15	–	–
PSG3-160	63	200	200	200	200	200	190	140	95	30	–	–
PSG3-200	68	200	200	200	200	200	200	175	130	65	20	–
PSG3-240	74	200	200	200	200	200	200	200	165	95	50	10
PSG6-100	69	200	200	200	200	200	145	85	45	–	–	–
PSG6-140	79	200	200	200	200	200	200	180	115	35	–	–
PSG6-160	84	200	200	200	200	200	200	200	155	60	10	–
PSG6-200	93	200	200	200	200	200	200	200	200	115	45	–
PSG6-240	106	200	200	200	200	200	200	200	200	190	95	30
PSG6-100R	69	200	200	200	200	200	200	140	90	25	–	–
PSG6-140R	79	200	200	200	200	200	200	200	145	55	10	–
PSG6-160R	84	200	200	200	200	200	200	200	180	75	20	–
PSG6-200R	93	200	200	200	200	200	200	200	200	125	50	5

Values limited by flexural capacity.

Values limited by deflection limit.

Values limited by shear capacity

SI: 1 in = 25.4 mm, 1-psf = 0.0479 kN/m^2

1. Allowable loads in this table are limited to 200-psf. If greater resistance capacity is needed, please contact Gulf Concrete Technology for professional engineering assistance.
2. The deflection limit is based on the controlling case of L/240 for the dead load plus live load combination and L/360 for the live load combination per IBC Table 1604.3. Other deflection limits can be provided upon request.
3. Tabulated allowable live loads are in addition to 15-psf of dead load and the self-weight of the panels.

Information contained in this report was developed using report holder's confidential intellectual property (IP) and trade secrets (TS), which is protected by Defend Trade Secrets Act 2016, © DrJ Engineering, LLC

6.4 GCT Insulated Concrete Panels for floors and roofs, with a double layer of bottom reinforcement (PSM Slab 2), have the allowable service live load (e.g., bedroom, office, snow load, etc.) capacities listed in **Table 9**. The load capacities shown are limited by the controlling design condition of shear strength, bearing strength, bending strength, or deflection (minimum code requirement for the floor) at ℓ/360 for live load (LL) and ℓ/240 for total load (TL).

Table 9. Allowable Service Live Load for GCT Insulated Concrete, Double-Reinforced Floor and Roof Panels

GCT Panel Type	Self-Weight (psf)	Allowable Floor or Roof Service Life Load (psf) for 15-psf of DL and Floor or Roof Deflection Limits of ℓ/360 for LL and ℓ/240 for TL[1,2]								
		Span Length (ft)								
		6	8	10	12	14	16	18	20	22
PSM80-Slab-2	51	200	200	95	40	10	-	-	-	-
PSM100-Slab-2	51	200	200	115	55	20	-	-	-	-
PSM120-Slab-2	51	200	200	145	75	35	10	-	-	-
PSM140-Slab-2	51	200	200	195	105	55	25	-	-	-
PSM160-Slab-2	51	200	200	200	130	75	35	15	-	-
PSM190-Slab-2	51	200	200	200	170	100	55	25	10	-
PSM240-Slab-2	51	200	200	200	200	155	95	60	30	-

Values limited by flexural capacity.

Values limited by deflection limit.

Values limited by shear capacity

1. Allowable loads in this table are limited to 200-psf. If greater resistance capacity is needed, please contact Gulf Concrete Technology for professional engineering assistance.
2. The deflection limit is based on the controlling case of L/240 for the dead load plus live load combination and L/360 for the live load combination per IBC Table 1604.3. Other deflection limits can be provided upon request.
3. Tabulated allowable live loads are in addition to 15-psf of dead load and the self-weight of the panels.

Information contained in this report was developed using report holder's confidential intellectual property (IP) and trade secrets (TS), which is protected by Defend Trade Secrets Act 2016, © DrJ Engineering, LLC

6.5 GCT Insulated Concrete Roof Panels have the allowable service live load (e.g., snow load) capacities listed in **Table 10**. The load capacities shown are limited by the controlling design condition of shear strength, bearing strength, bending strength, or deflection (minimum code requirement for the roof) at ℓ/240 for LL and ℓ/180 for TL.

Table 10. Allowable Service Live Load (psf) for GCT Insulated Concrete Roof Panels[1,2]

GCT Panel Type	Self-Weight (kPa)	Allowable Service Live Load (psf) for 15-psf of DL and Roof Deflection Limits of ℓ/240 for LL and ℓ/180 for TL										
		Span Length (ft)										
		6	8	10	12	14	16	18	20	24	28	32
PSM80-Slab and SMP80-Slab	51	200	110	50	20	–	–	–	–	–	–	–
PSM100-Slab	51	200	120	60	25	5	–	–	–	–	–	–
PSM120-Slab	51	200	140	70	35	10	–	–	–	–	–	–
PSM140-Slab	51	200	165	90	45	20	5	–	–	–	–	–
PSM160-Slab	51	200	185	100	55	25	10	–	–	–	–	–
PSM190-Slab	51	200	200	120	65	35	15	0	–	–	–	–
PSM240-Slab	51	200	200	155	90	55	30	10	0	–	–	–
PSG2-100	51	200	200	200	190	125	85	50	25	–	–	–
PSG2-140	55	200	200	200	200	170	120	85	55	15	–	–
PSG2-160	57	200	200	200	200	195	135	95	65	30	–	–
PSG2-200	60	200	200	200	200	200	170	125	90	45	15	–
PSG2-240	64	200	200	200	200	200	200	155	115	60	30	10
PSG3-100	56	200	200	200	200	175	120	70	35	–	–	–
PSG3-140	61	200	200	200	200	200	170	120	85	30	–	–
PSG3-160	63	200	200	200	200	200	190	140	100	50	5	–
PSG3-200	68	200	200	200	200	200	200	175	130	70	35	–
PSG3-240	74	200	200	200	200	200	200	200	165	95	50	25
PSG6-100	69	200	200	200	200	200	190	115	70	10	–	–
PSG6-140	79	200	200	200	200	200	200	200	155	60	10	–
PSG6-160	84	200	200	200	200	200	200	200	200	90	25	–
PSG6-200	93	200	200	200	200	200	200	200	200	145	70	15
PSG6-240	106	200	200	200	200	200	200	200	200	190	115	60
PSG6-100R	69	200	200	200	200	200	200	185	120	40	–	–
PSG6-140R	79	200	200	200	200	200	200	200	185	80	25	–
PSG6-160R	84	200	200	200	200	200	200	200	200	105	40	–
PSG6-200R	93	200	200	200	200	200	200	200	200	150	75	20

Information contained in this report was developed using report holder's confidential intellectual property (IP) and trade secrets (TS), which is protected by Defend Trade Secrets Act 2016, © DrJ Engineering, LLC

Table 10. Allowable Service Live Load (psf) for GCT Insulated Concrete Roof Panels[1,2]

GCT Panel Type	Self-Weight (kPa)	Allowable Service Live Load (psf) for 15-psf of DL and Roof Deflection Limits of ℓ/240 for LL and ℓ/180 for TL										
		Span Length (ft)										
		6	8	10	12	14	16	18	20	24	28	32
Values limited by flexural capacity.												
Values limited by deflection limit.												
Values limited by shear limit.												

SI: 1 in = 25.4 mm, 1-psf = 0.0479 kN/m^2

1. Allowable loads in this table are limited to 200-psf. If greater resistance capacity is needed, please contact Gulf Concrete Technology for professional engineering assistance.
2. The deflection limit is based on the controlling case of L/180 for the dead load plus live load combination and L/240 for the live load combination per IBC Table 1604.3. Other deflection limits can be provided upon request.
3. Tabulated allowable live loads are in addition to 15-psf of dead load and the self-weight of the panels.

6.6 GCT Insulated Concrete Floor and Roof Panels, with a double layer of bottom reinforcement (PSM Slab 2), have the allowable service live load (e.g., bedroom, office, snow load, etc.) capacities listed in **Table 11**. The load capacities shown are limited by the controlling design condition of shear strength, bearing strength, bending strength, or deflection (minimum code requirement for the roof) at ℓ/240 for LL and ℓ/180 for TL.

Table 11. Allowable Service Live Load for GCT Insulated Concrete, Double Reinforced Floor Panels

GCT Panel Type	Self-Weight (psf)	Allowable Service Live Load (psf) for 15-psf of DL and Roof Deflection Limits of ℓ/240 for LL and ℓ/180 for TL[1,2]									
		Span Length (ft)									
		6	8	10	12	14	16	18	20	22	24
PSM80-Slab-2	51	200	200	105	50	15	–	–	–	–	–
PSM100-Slab-2	51	200	200	130	65	25	–	–	–	–	–
PSM120-Slab-2	51	200	200	170	85	40	15	–	–	–	–
PSM140-Slab-2	51	200	200	200	120	65	30	10	–	–	–
PSM160-Slab-2	51	200	200	200	150	85	45	20	–	–	–
PSM190-Slab-2	51	200	200	200	185	115	65	35	15	–	–
PSM240-Slab-2	51	200	200	200	200	155	110	70	40	–	–
Values limited by flexural capacity.											
Values limited by deflection limit.											
Values limited by shear limit.											

1. Allowable loads in this table are limited to 200-psf. If greater resistance capacity is needed, please contact Gulf Concrete Technology for professional engineering assistance.
2. The deflection limit is based on the controlling case of L/180 for the dead load plus live load combination and L/360 for the live load combination per IBC Table 1604.3. Other deflection limits can be provided upon request.
3. Tabulated allowable live loads are in addition to 15-psf of dead load and the self-weight of the panels.

Information contained in this report was developed using report holder's confidential intellectual property (IP) and trade secrets (TS), which is protected by Defend Trade Secrets Act 2016, © DrJ Engineering, LLC

6.7 *Window and Door Headers*

6.7.1 GCT panel headers have the allowable vertical service load capacities listed in **Table 12**.

Table 12. Uniform Load Capacity of GCT Panel Headers - Allowable Uniform Service Load (plf)[1,2,3,4]

GCT Panel Type	Header Depth (in)	Allowable Uniform Service Load (plf)										
		Header Span (ft)										
		2	2.5	3	3.5	4	4.5	5	5.5	6	6.5	7
PSM	12	5,600	5,570	3,870	2,840	2,170	1,720	1,390	1,150	960	820	710
	18	8,400	8,400	7,130	5,240	4,010	3,170	2,560	2,120	1,780	1,510	1,310
	24	11,210	11,210	11,150	8,190	6,270	4,950	4,010	3,310	2,780	2,370	2,040
	30	14,010	14,010	14,010	11,700	8,960	7,080	5,730	4,740	3,980	3,390	2,920
	36	16,810	16,810	16,810	15,770	12,070	9,540	7,720	6,380	5,360	4,570	3,940

Values limited by shear at the support.

Values limited by flexural strength.

SI: 1 in = 25.4 mm, 1 lb/ft = 0.0146 kN/m

1. In all cases, the minimum header depth shall be at least 12".
2. Assumes that all applied loads are live loads.
3. Allowable service loads are calculated by dividing the design strength, φMn, by a load factor of 1.6 according to the load combinations in Section 5.3 of ACI 318-19.
4. The primary (strong) axis of the panels may be installed in either vertical or horizontal orientation where the length of the header is 4 feet or less. For headers greater than 4 feet in length, panels shall be oriented with the primary axis in the horizontal orientation.

6.8 GCT beams have the allowable uniform service load capacities listed in **Table 13**. Beam details are shown in **Figure 8**.

Table 13. Uniform Service Load Capacity (plf) of GCT Beams[1,2,3,4,5,6]

Beam Detail No.	Bottom Reinforcement	Top Reinforcement	Beam Depth (in)	Uniform Service Load Capacity (plf)						
				Beam Length (ft)						
				8	10	12	14	16	18	20
1	PSM Panel Without Additional Reinforcement		12	315	201	140	103	79	62	50
			16	572	366	254	187	143	113	92
			20	936	599	416	306	234	185	150
			24	1386	887	616	453	346	274	222
			30	2224	1423	988	726	556	439	356
			36	3246	2077	1443	1060	811	641	519
			48	4781	3792	2634	1935	1481	1170	948
			12	315	201	140	103	79	62	50

Information contained in this report was developed using report holder's confidential intellectual property (IP) and trade secrets (TS), which is protected by Defend Trade Secrets Act 2016, © DrJ Engineering, LLC

Table 13. Uniform Service Load Capacity (plf) of GCT Beams[1,2,3,4,5,6]

Beam Detail No.	Bottom Reinforcement	Top Reinforcement	Beam Depth (in)	Uniform Service Load Capacity (plf)						
				Beam Length (ft)						
				8	10	12	14	16	18	20
2	PSM Panel with Two Layers of Wire Mesh		12	566	362	252	185	142	112	91
			16	1076	688	478	351	269	212	172
			20	1749	1119	777	571	437	345	280
			24	2300	1655	1149	844	646	511	414
			30	2920	2336	1858	1365	1045	826	669
			36	3540	2832	2360	1981	1516	1198	970
			48	4781	3825	3187	2732	2390	2125	1760
3	(2) #4	N/A	12	1059	848	566	356	239	168	122
			16	1473	1178	982	742	532	374	272
			20	1886	1509	1258	1011	774	612	495
			24	2300	1840	1533	1299	994	786	636
			30	2920	2336	1947	1669	1357	1073	869
			36	3540	2832	2360	2023	1753	1385	1122
			48	4781	3825	3187	2732	2390	2080	1684
4	(3) #4	(2) #4	12	1059	848	706	514	345	242	176
		N/A	16	1473	1178	982	842	671	471	344
			20	1886	1509	1258	1078	943	822	628
			24	2300	1840	1533	1314	1150	1022	861
			30	2920	2336	1947	1669	1460	1298	1157
			36	3540	2832	2360	2023	1770	1573	1416
			48	4781	3825	3187	2732	2390	2125	1912
5	(4) #4	(2) #5	12	982	786	655	513	344	242	176
		(2) #4	16	1395	1116	930	797	698	550	401
		N/A	20	1809	1447	1206	1034	904	804	670
			24	2222	1778	1482	1270	1111	988	889
			30	2843	2274	1895	1624	1421	1263	1137
			36	3463	2770	2309	1979	1731	1539	1385
			48	4703	3763	3135	2688	2352	2090	1881

Information contained in this report was developed using report holder's confidential intellectual property (IP) and trade secrets (TS), which is protected by Defend Trade Secrets Act 2016, © DrJ Engineering, LLC

Table 13. Uniform Service Load Capacity (plf) of GCT Beams[1,2,3,4,5,6]

Beam Detail No.	Bottom Reinforcement	Top Reinforcement	Beam Depth (in)	Uniform Service Load Capacity (plf)						
				Beam Length (ft)						
				8	10	12	14	16	18	20
6	(5) #4	(2) #6	12	982	786	655	561	405	284	207
		(2) #4	16	1395	1116	930	797	698	595	434
		(2) #4	20	1809	1447	1206	1034	904	804	724
		N/A	24	2222	1778	1482	1270	1111	988	889
			30	2843	2274	1895	1624	1421	1263	1137
			36	3463	2770	2309	1979	1731	1539	1385
			48	4703	3763	3135	2688	2352	2090	1881

Values limited by flexural capacity.

Values limited by deflection limit.

Values limited by shear limit.

SI: 1 in = 25.4 mm, 1 lb/ft = 0.0146 kN/m

1. Top and Bottom reinforcement shall have 1.5" of concrete cover from the face of the bars to the exterior of the panel and 0.5" of cover on the interior of the panel.
2. Deflection limit is ℓ/360 for total load. The live load is assumed to be fifty percent (50%) of the total load.
3. Beams with rebar are assumed to be simply supported. Beams without rebar are assumed to have a fixed connection.
4. Design assumes that the panel is oriented with the strong axis in the horizontal direction.
5. The minimum beam depth shall be at least 12" and shall have at least two longitudinal wires.
6. Allowable service loads are calculated by dividing the design strength, φMn, by a load factor of 1.4.

Information contained in this report was developed using report holder's confidential intellectual property (IP) and trade secrets (TS), which is protected by Defend Trade Secrets Act 2016, © DrJ Engineering, LLC

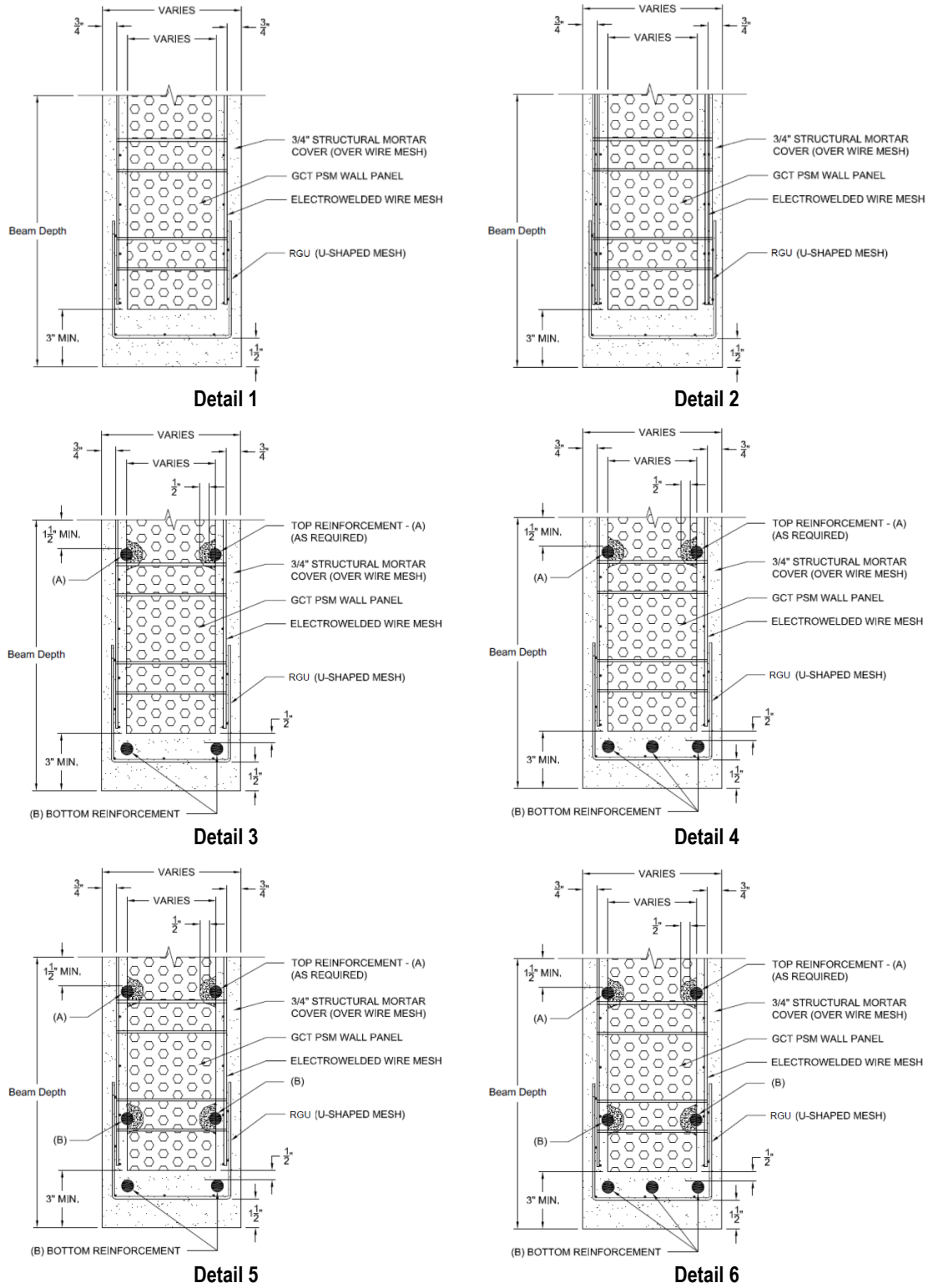

Figure 8. GCT Beam Details 1 to 6

Information contained in this report was developed using report holder's confidential intellectual property (IP) and trade secrets (TS), which is protected by Defend Trade Secrets Act 2016, © DrJ Engineering, LLC

6.9 *Shear Walls*

6.9.1 The allowable racking shear (i.e., for lateral shear wall design) service load on GCT panel walls is limited to the capacities shown in **Table 14**.

Table 14. Maximum Allowable Racking Shear for GCT Insulated Concrete Panels[1,2]

GCT Panel Type	Wall Length (ft)	Racking Shear (plf)			Deflection at Maximum Allowable Shear Load (in)		
		Wall Height (ft)					
		8	9	10	8	9	10
PSM	1.0	285	250	225	0.54	0.67	0.83
	1.5	380	340	305	0.27	0.34	0.42
	2.0	480	430	385	0.18	0.23	0.28
	2.5	585	520	465	0.14	0.18	0.22
	3.0	685	610	545	0.11	0.14	0.17
	4.0	885	785	710	0.08	0.10	0.13

SI: 1 in = 25.4 mm, 1 lb/ft = 0.0146 kN/m

1. Interpolation between wall heights is permitted.
2. Allowable service loads are calculated by dividing the design strength, φMn, by a load factor of 1.6 according to the load combinations in Section 5.3 of ACI 318-19.

6.10 GCT Insulated Concrete Panels have the design interaction diagrams for out-of-plane bending as shown in **Figure 9**.

6.10.1 The interaction diagram shown in **Figure 9** is for a 1' of panel width and account for failure of the panels by concrete crushing. See **Table 6** for the maximum axial load capacities of GCT wall panels that include limits due to buckling.

6.10.2 The moment and axial loads in the interaction diagram shown in **Figure 9** shall be compared to factored loads in accordance with the load combinations of ACI 318-19 Section 5.3.

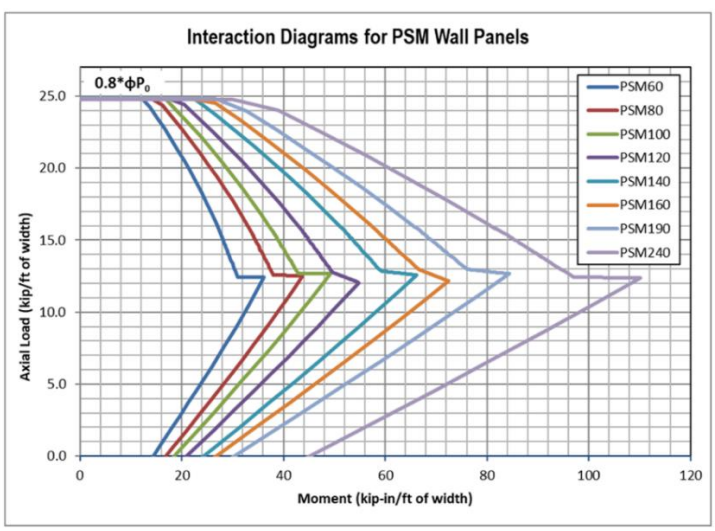

Figure 9. Interaction Diagram for PSM Wall Panels

Information contained in this report was developed using report holder's confidential intellectual property (IP) and trade secrets (TS), which is protected by Defend Trade Secrets Act 2016, © DrJ Engineering, LLC

6.11 R-values and U-factors assigned to GCT Insulated Concrete Panels are shown in **Table 15**.

Table 15. GCT Panel R-Values & U-Factors[1,2]

GCT Panel Type	R-Value °F × h × ft²/Btu (°K×m²/W)	U-Factor Btu/°F × h × ft² (W/°K×m²)
PSM60 and PSM60-Slab	9	0.10
PSM80 and PSM80-Slab	12	0.08
PSM100 and PSM100-Slab	14	0.07
PSM120 and PSM120-Slab	17	0.06
PSM140 and PSM140-Slab	20	0.05
PSM160 and PSM160-Slab	23	0.04
PSM190 and PSM190-Slab	27	0.04
PSM240 and PSM240-Slab	34	0.03
PSG2-100	20	0.05
PSG2-140	24	0.04
PSG2-160	27	0.04
PSG2-200	31	0.03
PSG2-240	36	0.03
PSG3-100	18	0.05
PSG3-140	23	0.04
PSG3-160	25	0.04
PSG3-200	29	0.03
PSG3-240	34	0.03
PSG6-100	15	0.07
PSG6-140	18	0.06
PSG6-160	19	0.05
PSG6-180	21	0.05
PSG6-200	22	0.05
PSG6-240	25	0.04
PSG6-100R	33	0.03
PSG6-140R	30	0.03

Information contained in this report was developed using report holder's confidential intellectual property (IP) and trade secrets (TS), which is protected by Defend Trade Secrets Act 2016, © DrJ Engineering, LLC

Table 15. GCT Panel R-Values & U-Factors[1,2]

GCT Panel Type	R-Value °F × h × ft²/Btu (°K×m²/W)	U-Factor Btu/°F × h × ft² (W/°K×m²)
PSG6-160R	29	0.03
PSG6-200R	26	0.04

1. Table values are calculated based on the sum of the R-values of the component parts of the GCT panels and include analysis of the conductance of the ties running through the EPS core.
2. The R-values are calculated based on ANSI/ASHRAE/IES 90.1.

6.12 *High Velocity Hurricane Zone (HVHZ) – Wind and Impact Testing*

6.12.1 GCT PSM wall panels were tested in accordance with TAS 201 – Impact Test Procedures and meet the missile impact test criteria for wind-borne debris in HVHZ in accordance with FBC Section 1626.

6.12.1.1 The PSM 120 wall panels resisted the impact of the 9-lb 2 x 4 missile propelled at 80 ft/s (54.5 mph) without damage to the backside of the panel.

6.12.1.2 The following PSM wall panels meet the requirements of FBC Section 1626:

6.12.1.2.1 PSM 120

6.12.1.2.2 PSM 140

6.12.1.2.3 PSM 160

6.12.1.2.4 PSM 190

6.12.1.2.5 PSM 240

6.12.2 GCT PSM wall panels were tested in accordance with TAS 202 – Criteria for Testing Impact and Nonimpact Resistant Building Envelope Components Using Uniform Static Air Pressure and meet the uniform static air pressure criteria for HVHZ in accordance with FBC Section 1620.

6.12.2.1 The PSM wall panels resisted a static positive and negative design wind pressure of 124-psf.

6.12.2.2 The following PSM wall panels meet the requirements of FBC Section 1620:

6.12.2.2.1 PSM 120

6.12.2.2.2 PSM 140

6.12.2.2.3 PSM 160

6.12.2.2.4 PSM 190

6.12.2.2.5 PSM 240

6.12.3 GCT PSM wall panels were tested in accordance with TAS 203 – Criteria for Testing Products Subject to Cyclic Wind Pressure Loading and meet the fatigue load test criteria for High Velocity Hurricane Zones (HVHZ) in accordance with FBC Section 1625.

6.12.3.1 The PSM panels resisted cyclic loading per FBC Table 1625.4 for a design load (p_{max}) of 124-psf.

6.12.3.1.1 Per ASCE 7, a wind pressure of 124-psf corresponds to a basic wind speed (V) of 283 mph. This assumes a mean roof height of 30 feet, Exposure Category B, a Topographic Factor of 1 and a Wind Directionality Factor of 0.85.

6.12.3.2 The following PSM wall panels meet the requirements of FBC Section 1625:

6.12.3.2.1 PSM 120

6.12.3.2.2 PSM 140

Information contained in this report was developed using report holder's confidential intellectual property (IP) and trade secrets (TS), which is protected by Defend Trade Secrets Act 2016, © DrJ Engineering, LLC

6.12.3.2.3 PSM 160

6.12.3.2.4 PSM 190

6.12.3.2.5 PSM 240

6.13 *Ballistics*

6.13.1 GCT PSM panels were tested in accordance with UL 752-05 – Standard for Bullet-Resisting Equipment (modified) for non-metallic, protection Level 3, see **Figure 10**.

6.13.1.1 Level 3 provides protection from 240 grain, .44 Magnum rounds without any penetration or spalling on the backside of the panel.

6.13.2 GCT PSM panels satisfied the ballistic resistance requirements of National Institute of Justice (NIJ) Standard 0108.01, Level III-A.

6.13.2.1 Level III-A protection can resist .44 Magnum and Submachine Gun 9 mm rounds and provides protection against most types of handguns.

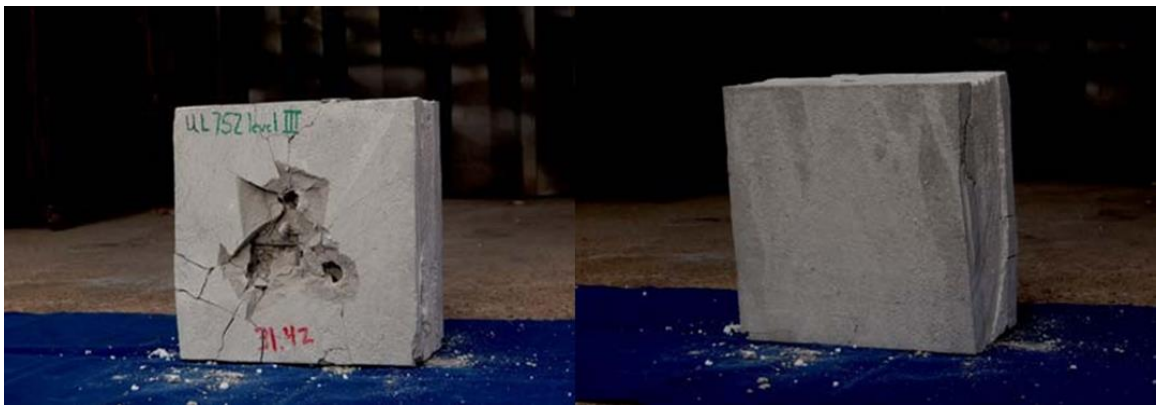

Figure 10. Front and Back of Panel from Ballistics Test

6.14 *Seismic Design*

6.14.1 Structures shall be designed for seismic forces in accordance with IBC Section 1613.

6.14.1.1 Seismic design for GCT floor, wall, and roof insulated concrete panels shall not be required in buildings exempt from seismic design in accordance with IBC Section 1613.

6.14.2 **Table 16** provides Seismic Design Coefficients (SDC) that conform to the requirements in ASCE 7 Section 12.2.1 and Table 12.2-1 for design of shear walls in buildings that require seismic design in accordance with ASCE 7 (i.e., all seismic design categories).

6.14.2.1 The response modification coefficient, R, system overstrength factor, Ω_0, and deflection amplification factor, C_d, indicated in **Table 16**, shall be used to determine the base shear, element design forces, and design story drift in accordance with ASCE 7 Chapter 12 and Section 14.5.

6.14.3 GCT wall panels used to resist shear forces shall have the following reinforcement provided:

6.14.3.1 GCT wall panels shall be anchored to the foundation/floor slab with a minimum of 18" long #4 rebar placed 12" o.c., staggered on each side of the panel, except on panel ends where two (2) rebar shall be placed across from each other. The rebar shall be provided with $^3/_4$" cover on all sides, and shall be placed inside of the wire mesh reinforcement.

6.14.3.2 GCT wall panels shall have angled wire mesh connecting the wall panels to the roof/floor panels. The wire mesh shall be embedded a minimum of 7" into the structural mortar cover of each panel and shall be provided on both the top and bottom of the roof/floor panel.

Information contained in this report was developed using report holder's confidential intellectual property (IP) and trade secrets (TS), which is protected by Defend Trade Secrets Act 2016, © DrJ Engineering, LLC

6.14.3.3 The edges of all GCT wall panels shall be provided with U-shaped wire mesh with 6" legs and a minimum of 3" of structural mortar cover.

6.14.3.4 Where adjoining pieces of angled or U-shaped wire mesh reinforcement are spliced, the pieces shall overlap by a minimum of two wire spaces.

6.14.3.5 A 1' x 2' piece of wire mesh installed at a 45° angle shall be provided at the corners of all openings on both sides of the GCT wall panels.

Table 16. Seismic Design Coefficients of GCT PSM Shear Wall Panels

Seismic Force-Resisting System	GCT Panel Type	Response Modification Factor, R[1]	System Overstrength Factor, Ω_0[2]	Deflection Amplification Coefficient, C_d[3]	Structural System Limitations and Building Height (ft) Limit[4]				
					Seismic Design Category				
					B	C	D	E	F
Special Reinforced Concrete Shear Walls	PSM	5	2.5	5	NL	NL	160	160	100

SI: 1 in = 25.4 mm

1. Response modification coefficient, R, for use throughout ASCE 7. *Note:* R reduces forces to a strength level, not an allowable stress level.
2. The tabulated value of the overstrength factor, Ω_0, is permitted to be reduced by subtracting one-half (0.5) for structures with flexible diaphragms.
3. Deflection amplification factor, C_d, for use with ASCE 7 Sections 12.8.6, 12.8.7, and 12.9.2.
4. NL = Not Limited. Heights are measured from the base of the structure as defined in ASCE 7 Section 11.2.

6.15 *Foam Plastic Insulation*

6.15.1 The EPS core that is integral to GCT panels shall meet the requirements of IBC Section 2603 and IRC Section R303.4,[28] as appropriate for this application.

6.15.2 *Thermal Barrier:*

6.15.2.1 An independent thermal barrier in accordance with IBC Section 2603.4 or IRC Section R303.4[29] is not required because the EPS core is covered in all cases by mortar, and is never exposed to the interior of the building.

6.15.2.2 The EPS core has been tested in accordance with ASTM D1929 and has a self-ignition temperature of 914°F (490°C).

6.15.3 *Fire Endurance Performance:*

6.15.3.1 For required mortar thickness for applications where fire-resistance ratings are required, see Report Number 1201-04.

6.15.3.2 For applications on buildings of any height, fire blocking must be installed in accordance with the applicable code. This includes fire blocking, as appropriate, at floor-to-wall intersections to prevent the passage of flame, smoke, and hot gasses from one story to another.

6.15.3.3 The EPS core must not be continuous from one story to another.

6.16 *Sound Transmission Class (STC)*

6.16.1 GCT Insulated Concrete Panels were tested in accordance to ASTM E90 to determine their sound transmission class in accordance with IBC Section 1206 and IRC Appendix AK.[30]

6.16.1.1 GCT Insulated Concrete Panels with a 7.5" thick EPS core or greater have a STC rating of 39.

Information contained in this report was developed using report holder's confidential intellectual property (IP) and trade secrets (TS), which is protected by Defend Trade Secrets Act 2016, © DrJ Engineering, LLC

6.17 Alternative techniques shall be permitted in accordance with accepted engineering practice and experience. These provisions for the use of alternative materials, designs, and methods of construction are not intended to prevent the installation of any material or to prohibit any design or method of construction not specifically prescribed herein. This includes, but is not limited to, the following areas of engineering: mechanics of materials, structures, building science, and fire science.

7 Certified Performance[31]

7.1 All construction methods shall conform to accepted engineering practices to ensure durable, livable, and safe construction and shall demonstrate acceptable workmanship reflecting journeyman quality of work of the various trades.[32]

7.2 The strength and rigidity of the component parts and/or the integrated structure shall be determined by engineering analysis or by suitable load tests to simulate the actual loads and conditions of application that occur.[33]

8 Regulatory Evaluation and Accepted Engineering Practice

8.1 GCT Insulated Concrete Panels comply with the following legislatively adopted regulations and/or accepted engineering practice for the following reasons:

8.1.1 Structural performance for shear wall assemblies used as lateral force resisting systems in Seismic Design Categories A through F, have been tested and evaluated in accordance with the following standards:

8.1.1.1 ASCE/SEI 7: Minimum Design Loads and Associated Criteria for Buildings and Other Structures

8.1.1.2 ASTM D7989: Standard Practice for Demonstrating Equivalent In-Plane Lateral Seismic Performance to Wood-Frame Shear Walls Sheathed with Wood Structural Panels

8.1.1.3 ASTM E72: Standard Test Methods of Conducting Strength Tests of Panels for Building Construction

8.1.1.4 ASTM E564: Standard Practice for Static Load Test for Shear Resistance of Framed Walls for Buildings

8.1.1.5 ASTM E2126: Standard Test Methods for Cyclic (Reversed) Load Test for Shear Resistance of Vertical Elements of the Lateral Force Resisting Systems for Buildings

8.1.2 Lateral force resisting systems for use in both wind and seismic applications follow the performance-based provisions of IBC Section 2306.1, IBC Section 2306.3, and/or Section 4.3 SDPWS for light-frame wood wall assemblies.

8.1.2.1 **Table 16** provides SDC that conform to the requirements in ASCE 7 Section 12.2.1, Section 12.2.1.1, and Table 12.2-1 for design of wall assemblies in buildings that require seismic design.

8.1.3 ASTM D7989 is accepted engineering practice used to establish SDC. Test data generated by ISO/IEC 17025 approved agencies and/or professional engineers, and all associated professional engineering evaluations, which use ASTM D7989 as their basis, are defined as intellectual property and/or trade secrets and are also defined as an independent design review (i.e., Listings, certified reports, duly authenticated reports from approved agencies, and/or research reports prepared by approved agencies and/or approved sources).

8.1.4 GCT floor, wall, and roof insulated concrete panels are composite assemblies used in bearing and non-bearing concrete wall applications and in reinforced concrete floor and roof assemblies.

8.1.4.1 The assemblies are used in both fire-rated and non-fire-rated construction.

Information contained in this report was developed using report holder's confidential intellectual property (IP) and trade secrets (TS), which is protected by Defend Trade Secrets Act 2016, © DrJ Engineering, LLC

8.1.5 GCT Insulated Concrete Panels were tested in accordance with ASTM E72 transverse and compressive loading techniques. Wall and roof/floor sections were tested to evaluate performance under the following conditions:

8.1.5.1 Structural performance under bending loading conditions for determining the bending stiffness and strength for bending about each axis (strong and weak).

8.1.5.2 Structural performance under bending loading conditions for determining the shear stiffness and strength for bending about each axis.

8.1.5.3 Structural performance under bending loading conditions for determining the bearing reaction strength for bending about each axis.

8.1.5.4 Structural performance under concentric and eccentric compression loading conditions for determining the compressive stiffness and strength about the strong axis.

8.1.5.5 Structural performance under concentric and eccentric compression loading conditions for determining the compressive stiffness and strength about the strong axis with window and door openings.

8.1.5.6 Structural performance under concentric compression loading conditions for determining the compressive bearing and shear capacity about the strong axis.

8.1.5.7 Structural performance under concentric and eccentric compression loading conditions for determining compressive bearing and shear capacity about the strong axis with window and door openings.

8.1.6 GCT Insulated Concrete Panels were tested in accordance with UL 752 to determine their ability to meet or exceed ballistics protection level 3.

8.1.7 GCT Insulated Concrete Panels were tested in accordance with ASTM E90 to determine their Sound Transmission Class (STC).

8.1.8 GCT Insulated Concrete Panels were tested in accordance with TAS 201 and ICC 500 Section 804 to determine their resistance to wind-borne debris impact loads.

8.1.9 GCT Insulated Concrete Panels were tested in accordance with TAS 202 to determine their resistance to static wind forces.

8.1.10 GCT Insulated Concrete Panels were tested in accordance with TAS 203 to determine their resistance to cyclic wind forces.

8.1.11 For GCT panel fire resistance, see Report Number 1201-04.

8.2 Any building code, regulation and/or accepted engineering evaluations (i.e., research reports, duly authenticated reports, etc.) that are conducted for this Listing were performed by DrJ, which is an ISO/IEC 17065 accredited certification body and a professional engineering company operated by RDP or approved sources. DrJ is qualified[34] to practice product and regulatory compliance services within its scope of accreditation and engineering expertise,[35] respectively.

8.3 Engineering evaluations are conducted with DrJ's ANAB accredited ICS code scope of expertise, which is also its areas of professional engineering competence.

9 Installation

9.1 Installation shall comply with the approved construction documents, the manufacturer installation instructions, this report, and the applicable building code.

9.2 In the event of a conflict between the manufacturer installation instructions and this report, contact the manufacturer for counsel on the proper installation method.

Information contained in this report was developed using report holder's confidential intellectual property (IP) and trade secrets (TS), which is protected by Defend Trade Secrets Act 2016, © DrJ Engineering, LLC

9.3 Installation, support, and structural detailing required for connections will be provided by Gulf Concrete Technology for each project to assure a proper load path to the foundation.

9.3.1 Example details can be found in **Appendix A** of this report.

9.3.2 Details shall be evaluated by the building designer for applicability to a specific building.

9.3.3 Installation shall be performed in accordance with the manufacturer installation instructions.

9.4 Support for GCT Insulated Concrete Panels (e.g., foundation walls, footings, etc.) must be level and free of dirt and loose material.

9.5 GCT Insulated Concrete Panels shall be installed and aligned in accordance with the plans designed and submitted to the building official per **Section 12**.

9.6 The high-strength mortar, complying with **Section 2.12.4.5.2** is applied to each face of the GCT wall panels and the underside of floor assemblies covering the welded wire mesh.

9.6.1 Mortar thickness is per the approved plans with a minimum cover of 1" ($^3/_4$" + $^1/_4$") over the wire mesh.

9.6.2 The tolerance is minus $^1/_4$".

9.7 The high-strength mortar shall be applied using a low-velocity application process in accordance with the manufacturer installation instructions and this report.

9.8 Where required, special inspection of the mortar application shall be in accordance with IBC Section 1908.1[36] and IBC Table 1705.3.

9.9 Where required, continuous inspection of poured concrete shall be in accordance with IBC Section 1705.3.

10 Substantiating Data

10.1 Testing has been performed under the supervision of a professional engineer and/or under the requirements of ISO/IEC 17025 as follows:

10.1.1 Material property testing including flexure, shear, and compression – weak axis, strong axis, door, and window in accordance with ASTM C78/C78M and ASTM E72

10.1.2 High Velocity Hurricane Zones testing in accordance with TAS 201, TAS 202, and TAS 203

10.1.3 Airborne sound transmission loss testing in accordance with ASTM E90

10.2 Information contained herein may include the result of testing and/or data analysis by sources that are approved agencies, approved sources, and/or an RDP. Accuracy of external test data and resulting analysis is relied upon.

10.3 Where applicable, testing and/or engineering analysis are based upon provisions that have been codified into law through state or local adoption of regulations and standards. The developers of these regulations and standards are responsible for the reliability of published content. DrJ's engineering practice may use a regulation-adopted provision as the control. A regulation-endorsed control versus a simulation of the conditions of application to occur establishes a new material as being equivalent to the regulatory provision in terms of quality, strength, effectiveness, fire resistance, durability, and safety.

10.4 The accuracy of the provisions provided herein may be reliant upon the published properties of raw materials, which are defined by the grade mark, grade stamp, mill certificate, or duly authenticated reports from approved agencies and/or approved sources provided by the supplier. These are presumed to be minimum properties and relied upon to be accurate. The reliability of DrJ's engineering practice, as contained in this duly authenticated report, may be dependent upon published design properties by others.

Information contained in this report was developed using report holder's confidential intellectual property (IP) and trade secrets (TS), which is protected by Defend Trade Secrets Act 2016, © DrJ Engineering, LLC

10.5 *Testing and Engineering Analysis*

10.5.1 The strength, rigidity, and/or general performance of component parts and/or the integrated structure are determined by suitable tests that simulate the actual conditions of application that occur and/or by accepted engineering practice and experience.[37]

10.6 Where additional condition of use and/or regulatory compliance information is required, please search for GCT Insulated Concrete Panels on the DrJ Certification website.

11 Findings

11.1 As outlined in **Section 6**, GCT Insulated Concrete Panels have performance characteristics that were tested and/or meet applicable regulations. In addition, they are suitable for use pursuant to its specified purpose.

11.2 When used and installed in accordance with this duly authenticated report and the manufacturer installation instructions, GCT Insulated Concrete Panels shall be approved for the following applications:

11.2.1 Use in bearing and non-bearing concrete wall applications and in reinforced concrete floor and roof assemblies.

11.2.2 Use in both fire-rated and non-fire-rated construction.

11.3 Unless exempt by state statute, when GCT Insulated Concrete Panels are to be used as a structural and/or building envelope component in the design of a specific building, the design shall be performed by an RDP.

11.4 Any application specific issues not addressed herein can be engineered by an RDP. Assistance with engineering is available from Gulf Concrete Technology.

11.5 IBC Section 104.2.3[38] (IRC Section R104.2.2[39] and IFC Section 104.2.3[40] are similar) in pertinent part state:

> **104.2.3 Alternative Materials, Design and Methods of Construction and Equipment.** The provisions of this code are not intended to prevent the installation of any material or to prohibit any design or method of construction not specifically prescribed by this code, provided that any such alternative is not specifically prohibited by this code and has been approved.

11.6 **Approved:**[41] Building regulations require that the building official shall accept duly authenticated reports.[42]

11.6.1 An approved agency is *"approved"* when it is ANAB ISO/IEC 17065 accredited.

11.6.2 An approved source is *"approved"* when an RDP is properly licensed to transact engineering commerce.

11.6.3 Federal law, Title 18 US Code Section 242, requires that, where the alternative product, material, service, design, assembly, and/or method of construction is not approved, the building official shall respond in writing, stating the reasons why the alternative was not approved. Denial without written reason deprives a protected right to free and fair competition in the marketplace.

11.7 DrJ is a licensed engineering company, employs licensed RDPs and is an ANAB Accredited Product Certification Body – Accreditation #1131.

11.8 Through the IAF Multilateral Arrangement (MLA), this duly authenticated report can be used to obtain product approval in any jurisdiction or country because all ANAB ISO/IEC 17065 duly authenticated reports are equivalent.[43]

Information contained in this report was developed using report holder's confidential intellectual property (IP) and trade secrets (TS), which is protected by Defend Trade Secrets Act 2016, © DrJ Engineering, LLC

12 Conditions of Use

12.1 As defined in **Section 6**, where material and/or engineering mechanics properties are created for load resisting design purposes, the resistance to the applied load shall not exceed the ability of the defined properties to resist those loads using the principles of accepted engineering practice.

12.2 As listed herein, GCT Insulated Concrete Panels shall be used:

12.2.1 This report, when required by the authority having jurisdiction, shall be submitted at the time of permit application.

12.2.2 Design drawings and calculations shall follow the requirements of this report and be submitted to the building official for approval.

12.2.3 Where required by the statutes of the jurisdiction where the building is to be constructed, the design drawings shall be prepared by the RDP for the Building licensed in the jurisdiction.

12.2.4 When required by the applicable code, an underground water investigation shall be made. If a hydrostatic pressure condition exists, the foundation walls must be waterproofed in accordance with the code.

12.2.5 Evaluation of waterproofing materials is outside the scope of this report.

12.2.6 The soil capacity of the building site must be consistent with the requirements of the applicable code.

12.2.6.1 For use with the IRC, the soil capacity of the site may be assumed to have the load-bearing capacities specified in IRC Table R401.4.1(1).

12.2.6.2 In this case, a separate geotechnical evaluation is not required.

12.2.7 Installation of the high-strength mortar and concrete, which require special inspection under the IBC, shall comply with **Section 9.6** and **Section 9.7** of this report.

12.3 GCT foundation panels must be designed, manufactured, identified, and installed in accordance to this report.

12.3.1 Each installation shall provide Gulf Concrete Technology with quality control specimens for testing to confirm fundamental design properties of the mortar and the panels.

12.3.2 Each installation shall provide verification that the GCT Insulated Concrete Panels were installed in accordance with the Gulf Concrete Technology installation instructions and connection details.

12.4 When required by adopted legislation and enforced by the building official, also known as the Authority Having Jurisdiction (AHJ) in which the project is to be constructed:

12.4.1 Any calculations incorporated into the construction documents shall conform to accepted engineering practice and, when prepared by an approved source, shall be approved when signed and sealed.

12.4.2 This report and the installation instructions shall be submitted at the time of permit application.

12.4.3 These innovative products have an internal quality control program and a third-party quality assurance program.

12.4.4 At a minimum, these innovative products shall be installed per **Section 9**.

12.4.5 The review of this report by the AHJ shall comply with IBC Section 104.2.3.2 and IBC Section 105.3.1.

12.4.6 These innovative products have an internal quality control program and a third party quality assurance program in accordance with IBC Section 104.7.2, IBC Section 110.4, IBC Section 1703, IRC Section R104.7.2, and IRC Section R109.2.

12.4.7 The application of these innovative products in the context of this report is dependent upon the accuracy of the construction documents, implementation of installation instructions, inspection as required by IBC Section 110.3, IRC Section R109.2, and any other regulatory requirements that may apply.

Information contained in this report was developed using report holder's confidential intellectual property (IP) and trade secrets (TS), which is protected by Defend Trade Secrets Act 2016, © DrJ Engineering, LLC

12.5 The approval of this report by the AHJ shall comply with IBC Section 1707.1, where legislation states in part, *"the building official shall make, or cause to be made, the necessary tests and investigations; or the building official shall accept duly authenticated reports from approved agencies in respect to the quality and manner of use of new materials or assemblies as provided for in Section 104.2.3"*, all of IBC Section 104, and IBC Section 105.3.

12.6 Design loads shall be determined in accordance with the regulations adopted by the jurisdiction in which the project is to be constructed and/or by the building designer (i.e., owner or RDP).

12.7 The actual design, suitability, and use of this report for any particular building, is the responsibility of the owner or the authorized agent of the owner.

13 Identification

13.1 GCT Insulated Concrete Panels (PSM Series Wall Panels, PSM Series Slabs, PSG Series Slabs, and SMP 80 Slab), as listed in **Section 1.1**, are identified by a label on the board or packaging material bearing the manufacturer name, product name, this report number, and other information to confirm code compliance.

13.2 Additional technical information can be found at structuralpanelsgct.com.

14 Review Schedule

14.1 This report is subject to periodic review and revision. For the latest version, visit www.drjcertification.org.

14.2 For information on the status of this report, please contact DrJ Certification.

Information contained in this report was developed using report holder's confidential intellectual property (IP) and trade secrets (TS), which is protected by Defend Trade Secrets Act 2016, © DrJ Engineering, LLC

Appendix A

Miscellaneous Floor Slab, Foundation Wall, Floor Wall and Roof Construction Details

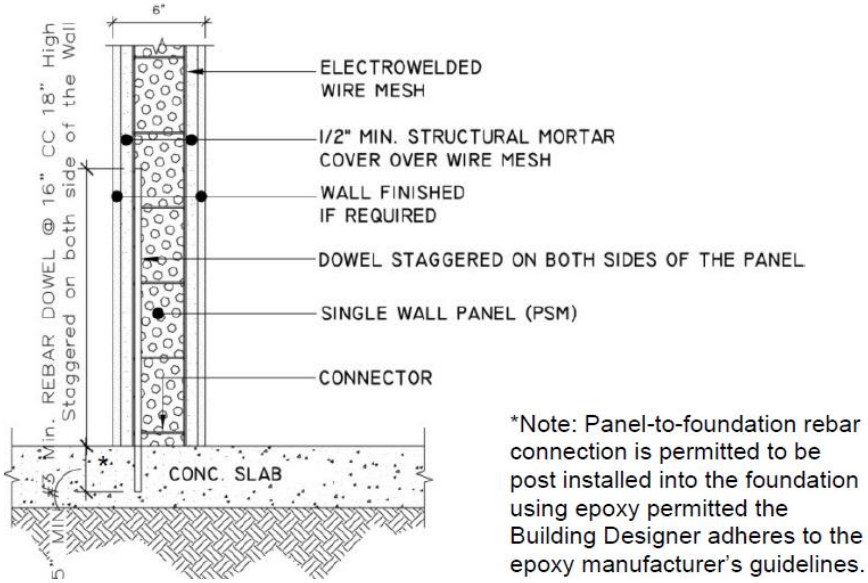

Figure A-11. Example of GCT Panel Connection to Interior Slab on Grade

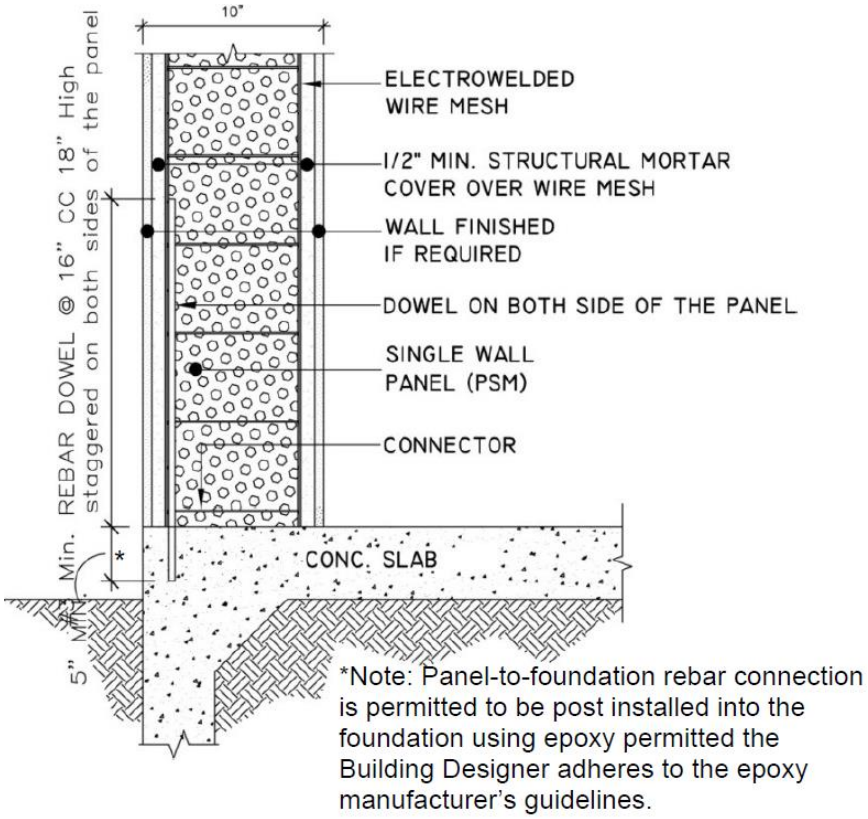

Figure A-12. Example of GCT Panel Connection at Exterior Turned Down Slab Footing

Information contained in this report was developed using report holder's confidential intellectual property (IP) and trade secrets (TS), which is protected by Defend Trade Secrets Act 2016, © DrJ Engineering, LLC

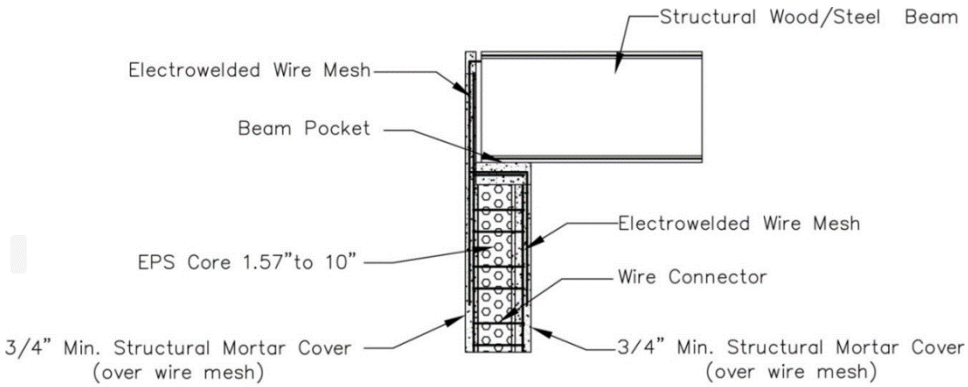

Figure A-13. PSM Wall Section with Beam Pocket

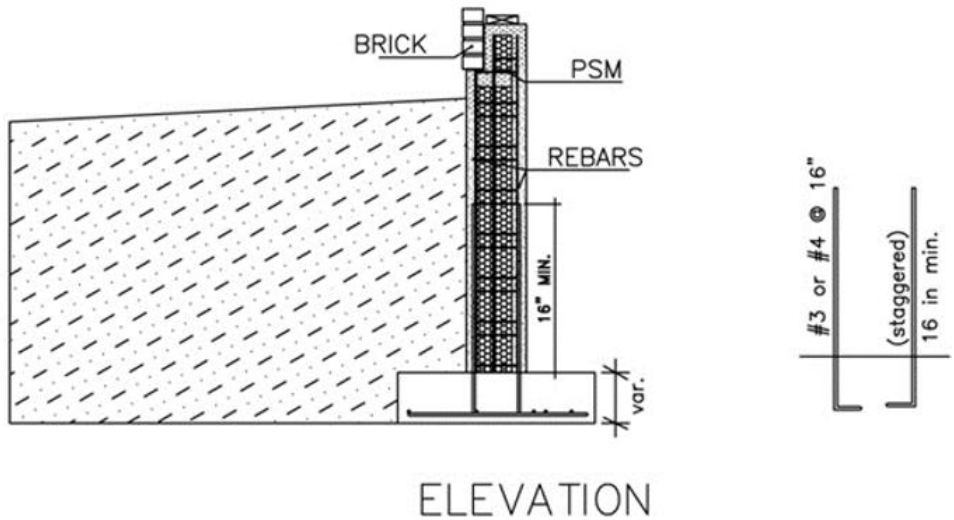

Figure A-14. Foundation Anchoring to PSM Wall with Brick Veneer

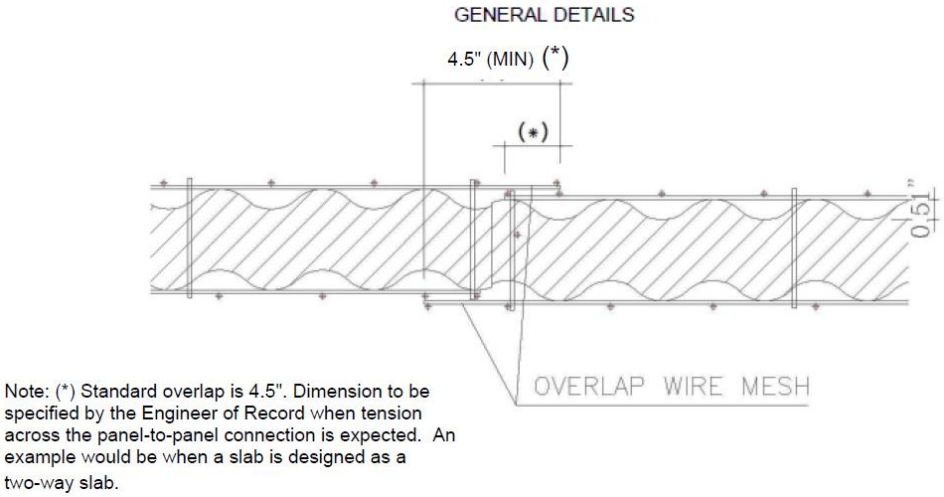

Figure A-15. Panel-to-Panel Connection/Joint

Information contained in this report was developed using report holder's confidential intellectual property (IP) and trade secrets (TS), which is protected by Defend Trade Secrets Act 2016, © DrJ Engineering, LLC

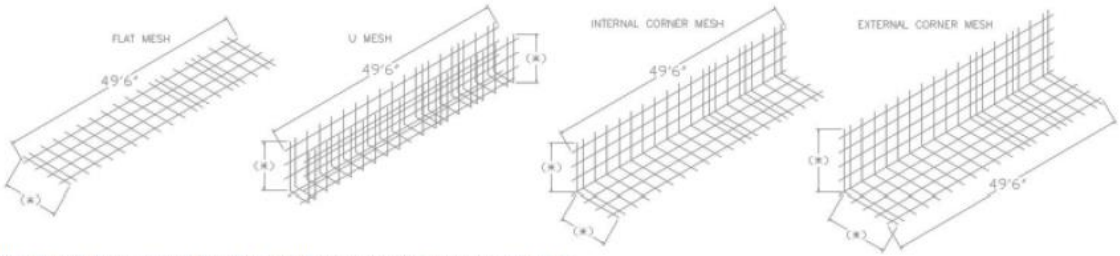

Note: (*) See Table 1a for standard mesh sizes. Customizable mesh sizes are available upon request, contact GCT for more information

Figure A-16. Typical Types of Mesh Used for Reinforcement/Connection

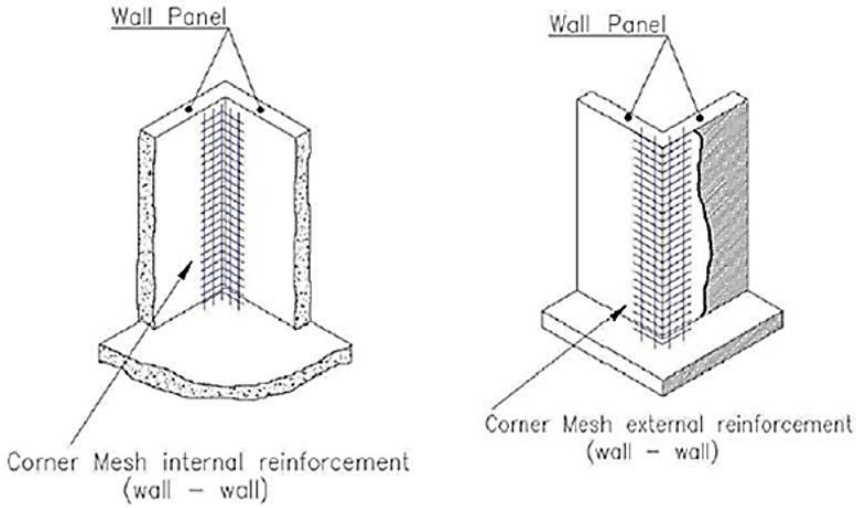

Figure A-17. Corner Mesh Details

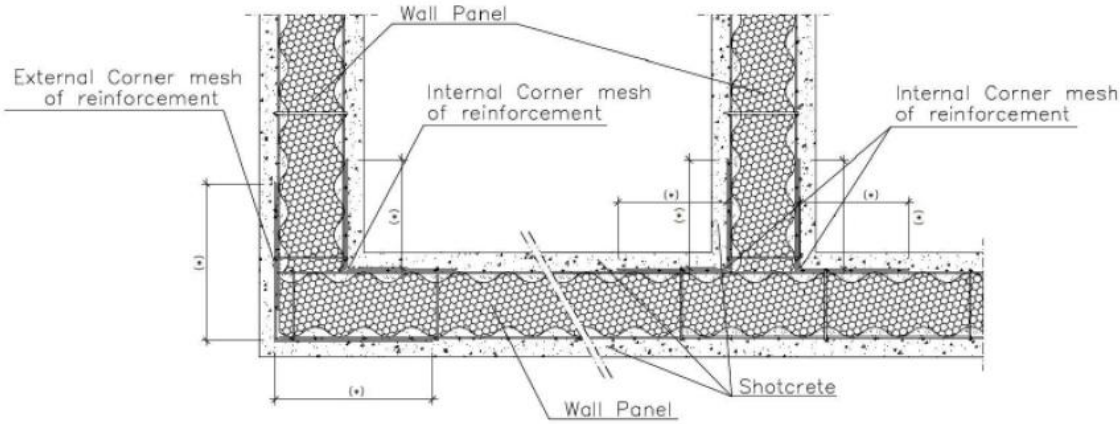

Note: (*) Customizable mesh sizes are available upon request, contact GCT for more information

Figure A-18. Internal Corner Mesh Reinforcement

Information contained in this report was developed using report holder's confidential intellectual property (IP) and trade secrets (TS), which is protected by Defend Trade Secrets Act 2016, © DrJ Engineering, LLC

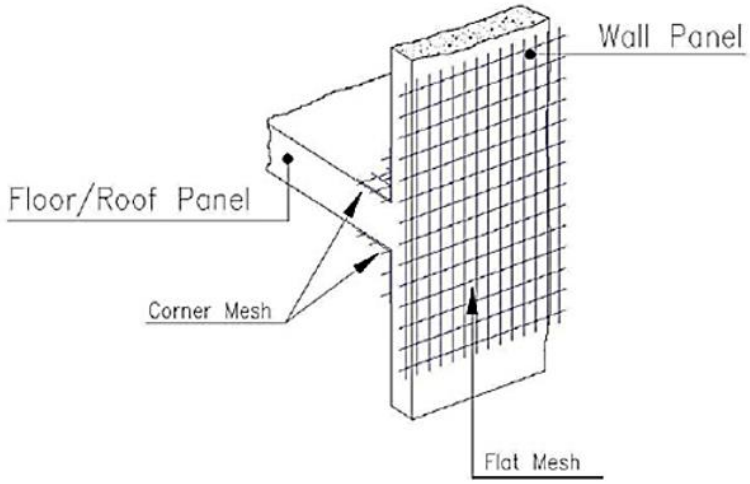

Figure A-19. Exterior Panel to Floor/Roof Panel Connection

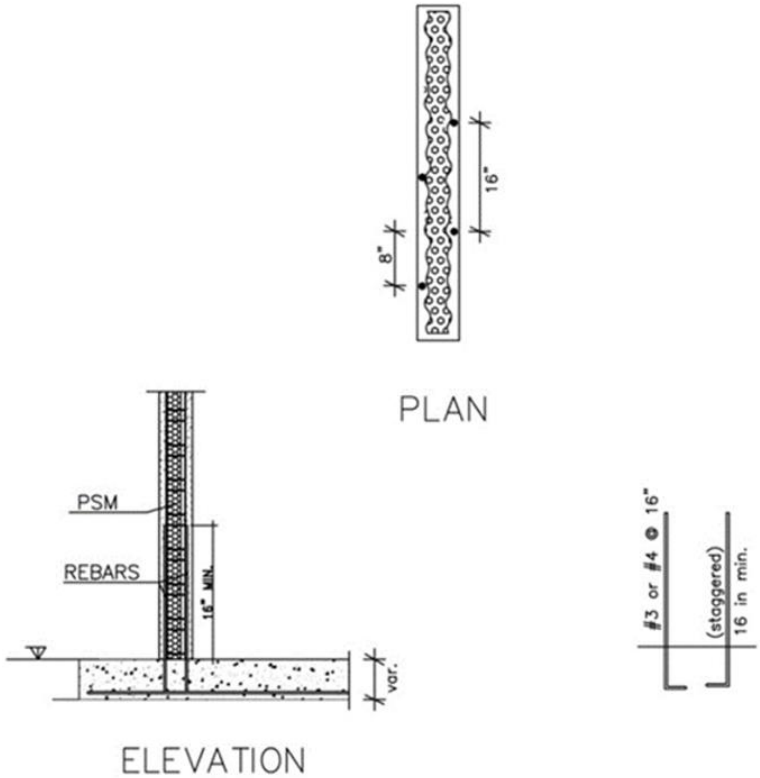

Figure A-20. Foundation Anchoring to PSM Wall

Information contained in this report was developed using report holder's confidential intellectual property (IP) and trade secrets (TS), which is protected by Defend Trade Secrets Act 2016, © DrJ Engineering, LLC

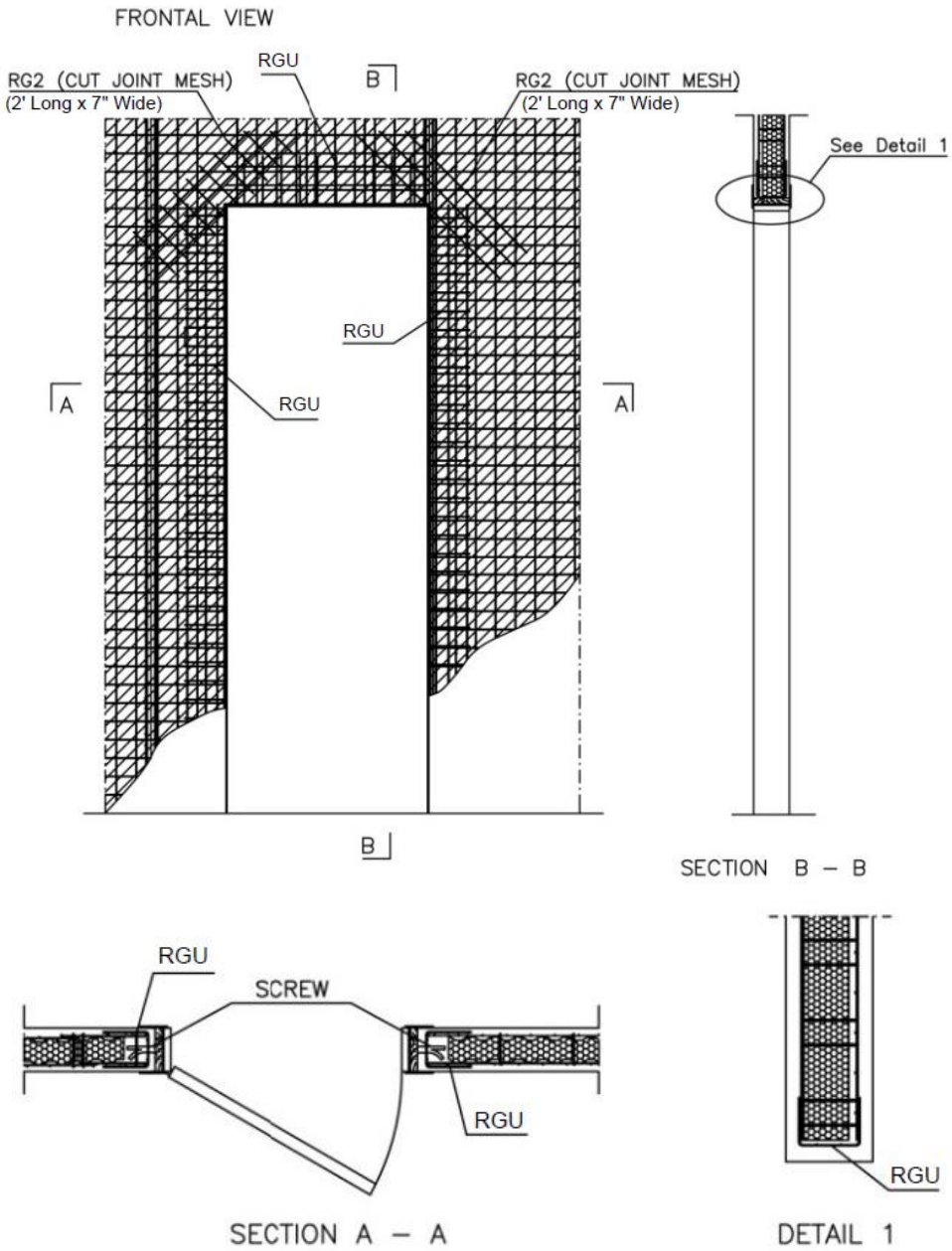

Figure A-21. Opening Reinforcement for a PSM Wall

Information contained in this report was developed using report holder's confidential intellectual property (IP) and trade secrets (TS), which is protected by Defend Trade Secrets Act 2016, © DrJ Engineering, LLC

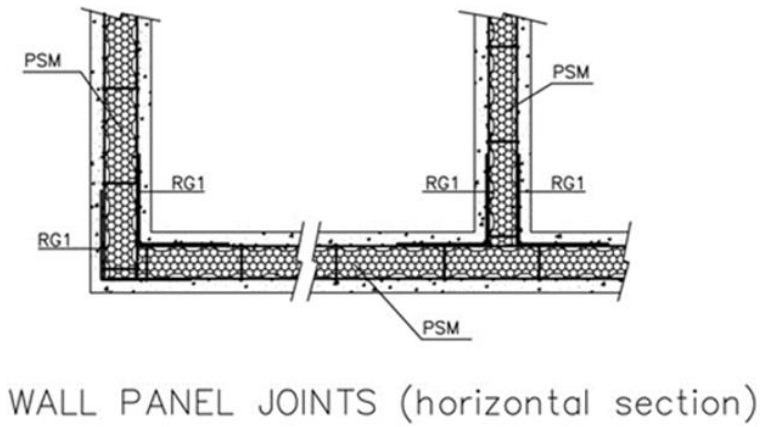

Figure A-22. Wall Single PSM Panel Connection

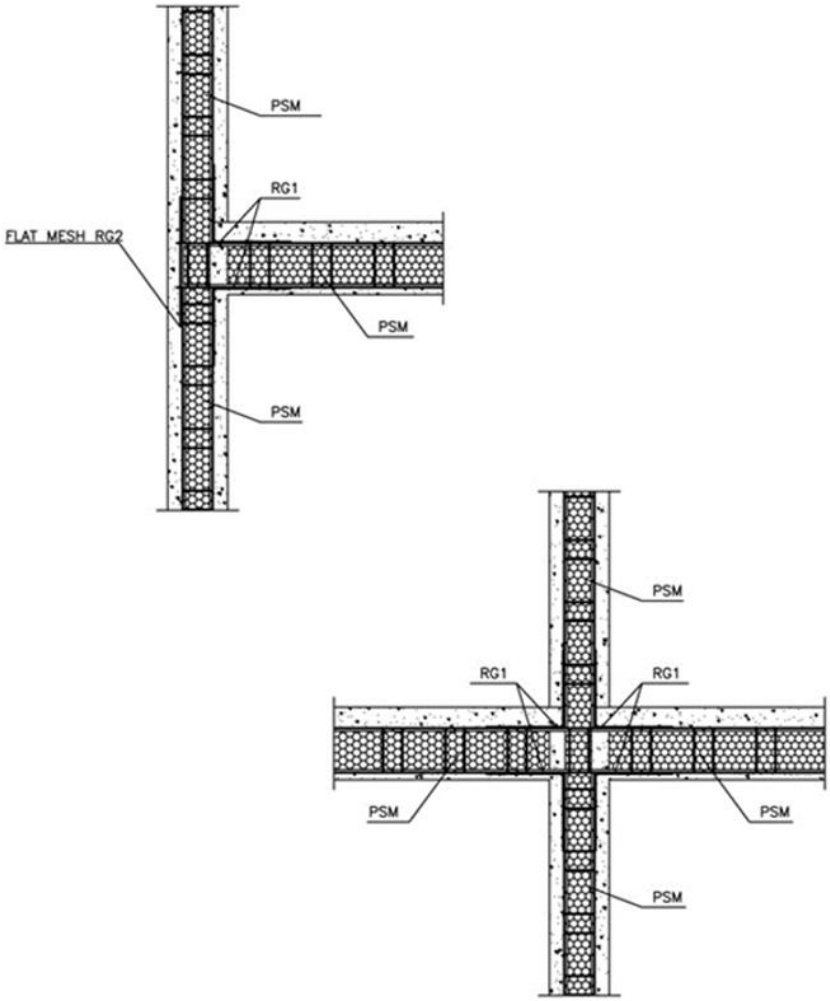

Figure A-23. PSM Slab to PSM Wall Connection - Plan View

Information contained in this report was developed using report holder's confidential intellectual property (IP) and trade secrets (TS), which is protected by Defend Trade Secrets Act 2016, © DrJ Engineering, LLC

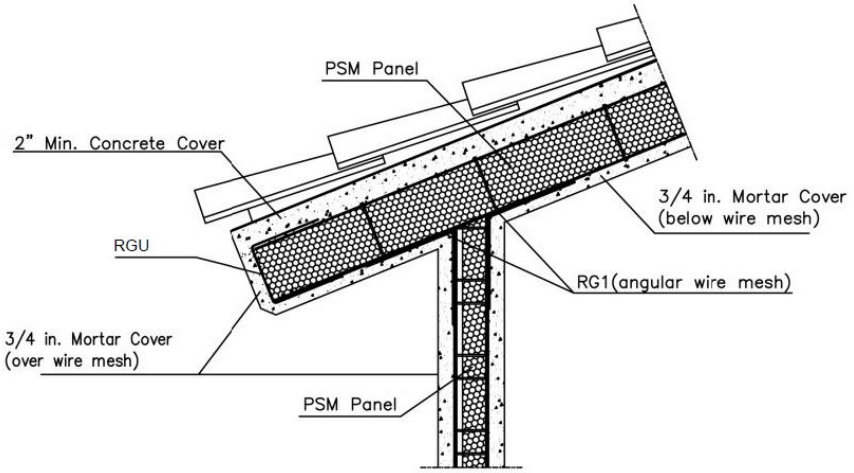

Figure A-24. PSM Wall to PSM Roof Connection

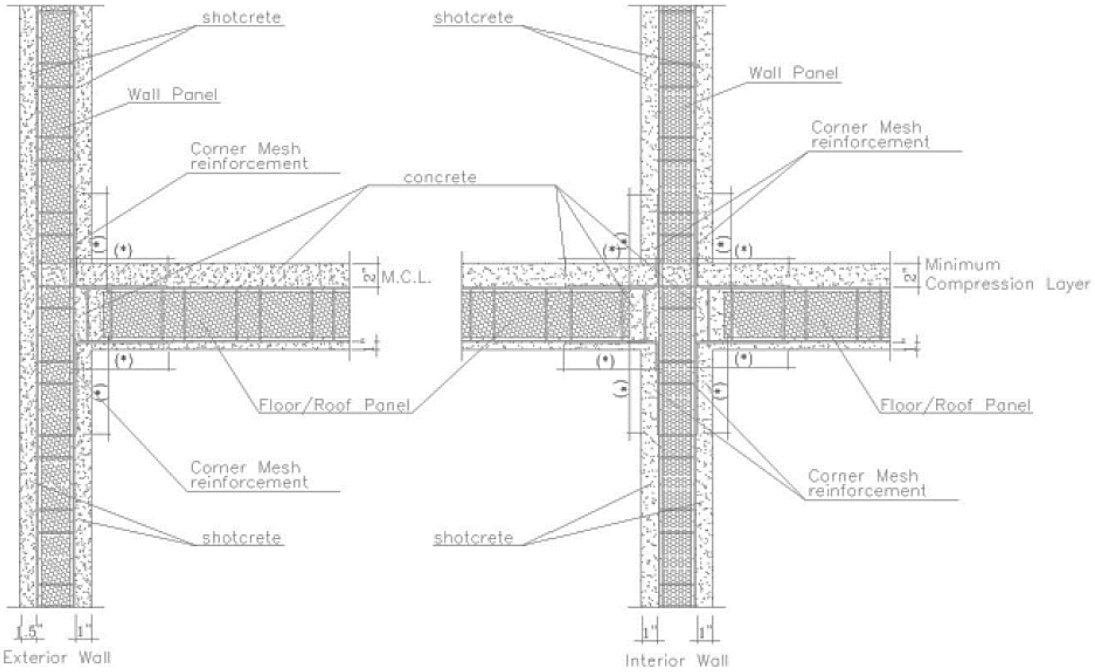

Note: (*) Customizable mesh sizes are available upon request, contact GCT for more information

Figure A-25. Wall Panel to Floor/Roof Panel Connection

Information contained in this report was developed using report holder's confidential intellectual property (IP) and trade secrets (TS), which is protected by Defend Trade Secrets Act 2016, © DrJ Engineering, LLC

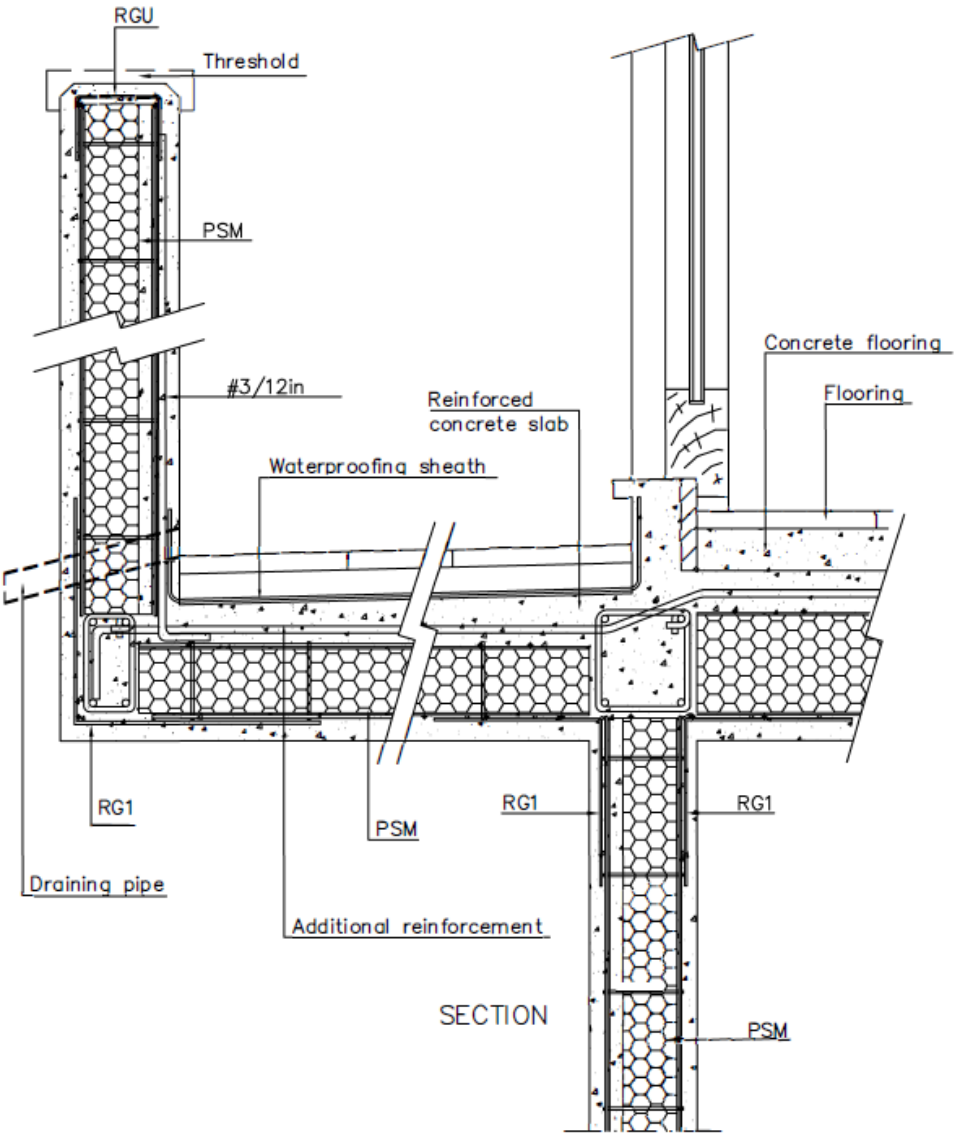

Figure A-26. Balcony with PSM Walls

Information contained in this report was developed using report holder's confidential intellectual property (IP) and trade secrets (TS), which is protected by Defend Trade Secrets Act 2016, © DrJ Engineering, LLC

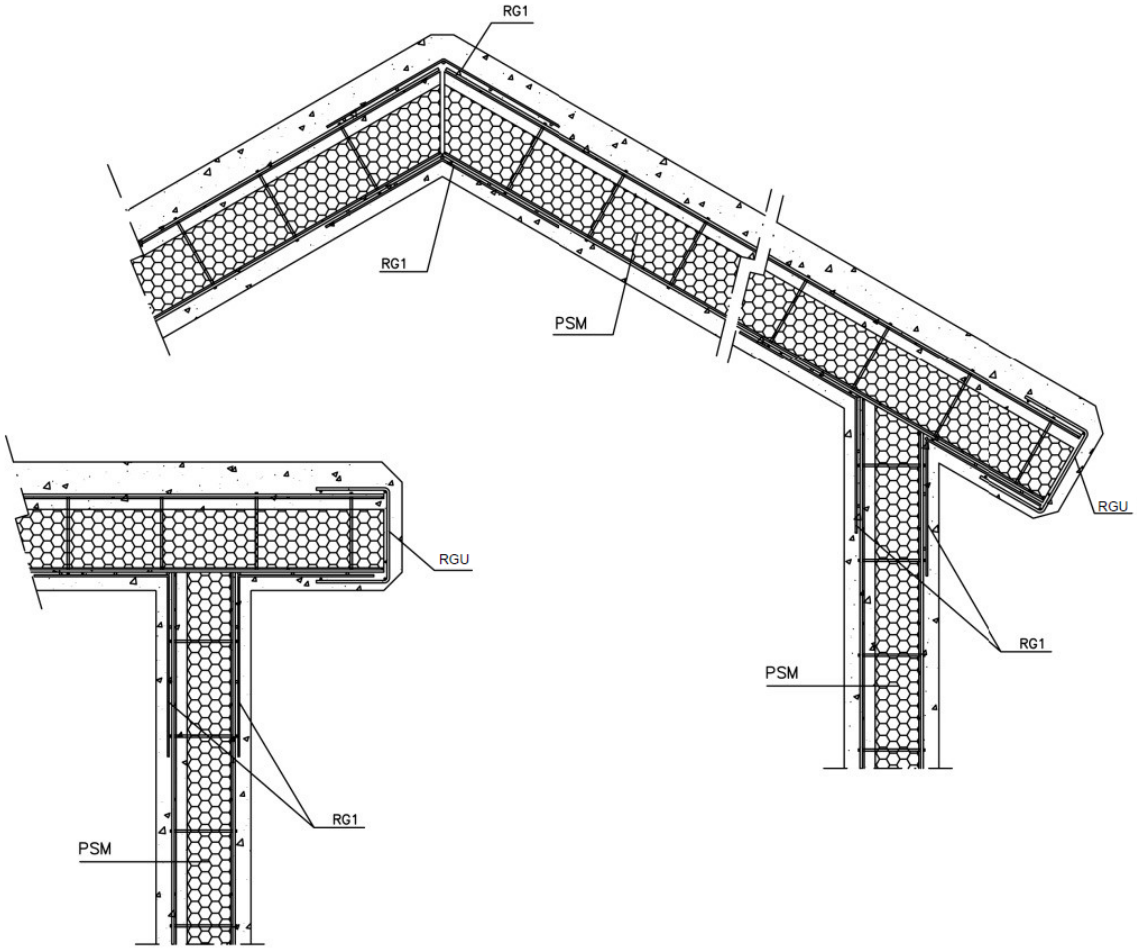

Figure A-27. PSM Roof Connection to PSM Wall

Information contained in this report was developed using report holder's confidential intellectual property (IP) and trade secrets (TS), which is protected by Defend Trade Secrets Act 2016, © DrJ Engineering, LLC

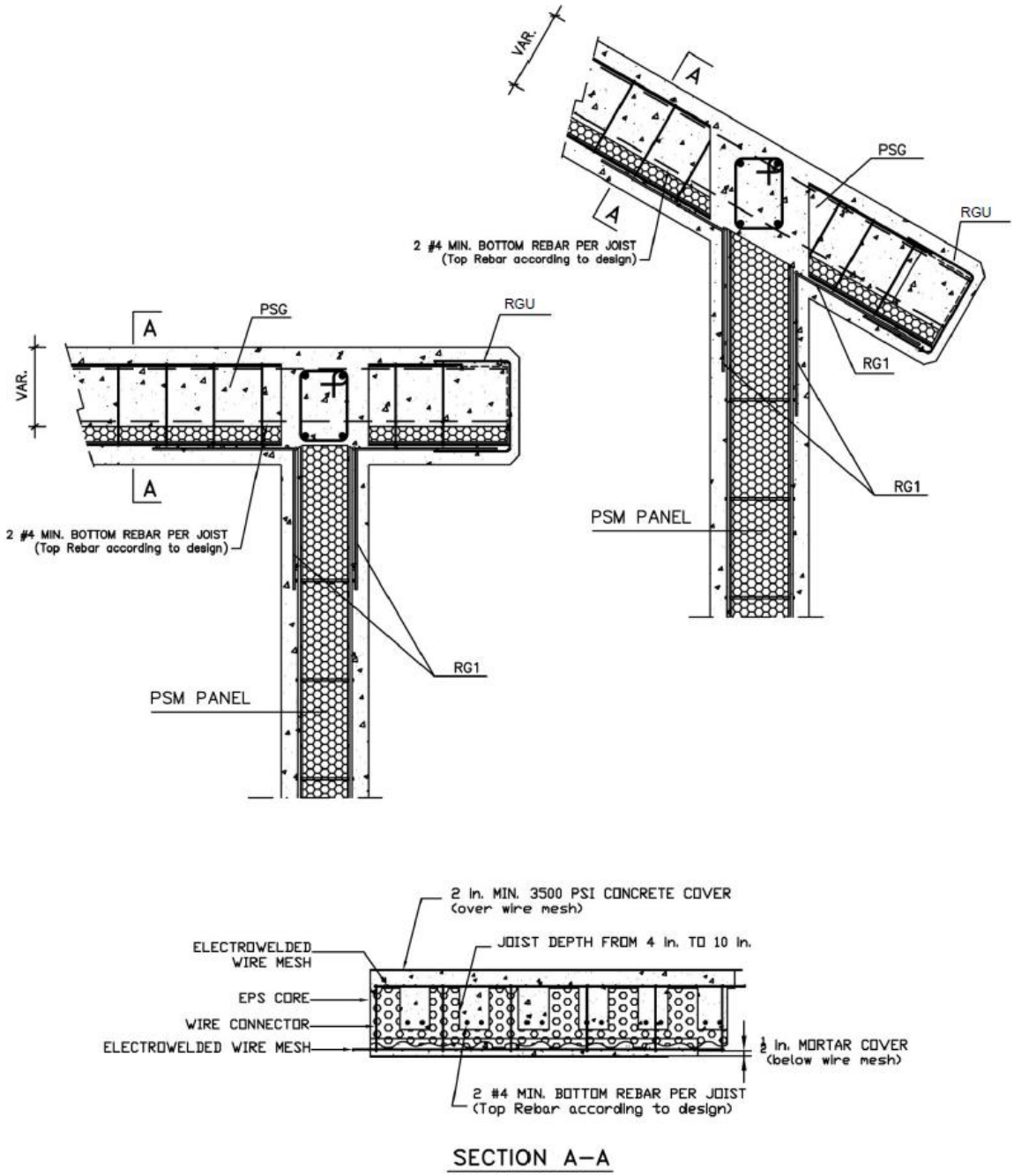

Figure A-28. PSG Roof to PSM Wall

Information contained in this report was developed using report holder's confidential intellectual property (IP) and trade secrets (TS), which is protected by Defend Trade Secrets Act 2016, © DrJ Engineering, LLC

Issue Date: July 7, 2021
Supplement Revision Date: February 24, 2026
Subject to Renewal: April 1, 2027

FBC Supplement to Report Number 1202-12

REPORT HOLDER: Gulf Concrete Technology

1 Evaluation Subject

1.1 GCT Insulated Concrete Panels:

1.1.1 PSM Series Wall Panels

1.1.2 PSM Series Slabs

1.1.3 PSG Series Slabs

1.1.4 SMP 80 Slab

2 Purpose and Scope

2.1 Purpose

2.1.1 The purpose of this Report Supplement is to show GCT Insulated Concrete Panels, recognized in Report Number 1202-12, have also been evaluated for compliance with the codes listed below as adopted by the Florida Building Commission.

2.2 *Applicable Code Editions*

2.2.1 *FBC-B—20, 23: Florida Building Code – Building (FL 30050)*

2.2.2 *FBC-R—20, 23: Florida Building Code – Residential (FL 30050)*

3 Conclusions

3.1 GCT Insulated Concrete Panels, described in Report Number 1202-12, comply with the FBC-B and FBC-R and are subject to the conditions of use described in this supplement.

3.2 Where there are variations between the IBC and IRC and the FBC-B and FBC-R applicable to this report, they are listed here:

3.2.1 FBC-B Section 104 is reserved.

3.2.2 FBC-B Section 110.4 is reserved and replaces IBC Section 110.4.

3.2.3 FBC-B Section 104.6 is reserved and replaces IBC Section 104.4.

3.2.4 FBC-B Section 104.11 replaces IBC Section 104.2.3 and Section 104.2.3.2.

3.2.5 FBC-B Section 105.3 replaces IBC Section 105.3.

3.2.6 FBC-B Section 105.3.1 replaces IBC Section 105.3.1.

3.2.7 FBC-B Section 110.3 replaces IBC Section 110.3.

3.2.8 FBC-B Section 1207 replaces IBC Section 1206.

3.2.9 FBC-B Section 1613 is reserved and replaces IBC Section 1613.

3.2.10 FBC-B Section 1705 is reserved and replaces IBC Section 1705.3.

Information contained in this report was developed using report holder's confidential intellectual property (IP) and trade secrets (TS), which is protected by Defend Trade Secrets Act 2016, © DrJ Engineering, LLC

3.2.11 FBC-B Section 1707.1 replaces IBC Section 1707.1.

3.2.12 FBC-B Section 2306.1 replaces IBC Section 2306.1.

3.2.13 FBC-B Section 2306.3 replaces IBC Section 2306.3.

3.2.14 FBC-B Section 2603 replaces IBC Section 2603.

3.2.15 FBC-B Section 2603.4 replaces IBC Section 2603.4.

3.2.16 FBC-R Section R104 and Section R109 are reserved.

3.2.17 FBC-R Section R316.4 replaces IRC Section R303.4.

4 Conditions of Use

4.1 GCT Insulated Concrete Panels, described in Report Number 1202-12, must comply with all of the following conditions:

4.1.1 All applicable sections in Report Number 1202-12.

4.1.2 The design, installation, and inspections are in accordance with additional requirements of FBC-B Chapter 16 and Chapter 17, as applicable.

Information contained in this report was developed using report holder's confidential intellectual property (IP) and trade secrets (TS), which is protected by Defend Trade Secrets Act 2016, © DrJ Engineering, LLC

Notes

1 For more information, visit drjcertification.org or call us at 608-310-6748.

2 When tested in accordance with ASTM E84 in a 4" thickness and maximum 1.0 pcf density.

3 Capitalized terms and responsibilities are defined pursuant to the applicable building code, applicable reference standards, the latest edition of TPI 1, the NDS, AISI S202, US professional engineering law, Canadian building code, Canada professional engineering law, Qualtim External Appendix A: Definitions/Commentary, Qualtim External Appendix B: Project/Deliverables, Qualtim External Appendix C: Intellectual Property and Trade Secrets, definitions created within Design Drawings and/or definitions within Reference Sheets. Beyond this, terms not defined shall have ordinarily accepted meanings as the context implies. Words used in the present tense include the future; words stated in the masculine gender include the feminine and neuter; the singular number includes the plural and the plural, the singular.

4 https://up.codes/viewer/mississippi/ibc-2024/chapter/17/special-inspections-and-tests#1702

5 Alternative Materials, Design and Methods of Construction and Equipment: The provisions of any regulation code are not intended to prevent the installation of any material or to prohibit any design or method of construction not specifically prescribed by a regulation. Please review https://www.justice.gov/atr/mission and https://up.codes/viewer/mississippi/ibc-2024/chapter/1/scope-and-administration#104.2.3

6 https://up.codes/viewer/mississippi/ibc-2024/chapter/17/special-inspections-and-tests#1706.2:~:text=the%20design%20strengths%20and%20permissible%20stresses%20shall%20be%20established%20by%20tests

7 The design strengths and permissible stresses of any structural material shall conform to the specifications and methods of design of accepted engineering practice. https://up.codes/viewer/mississippi/ibc-2024/chapter/17/special-inspections-and-tests#1706.1:~:text=Conformance%20to%20Standards-,The%20design%20strengths%20and%20permissible%20stresses,-of%20any%20structural

8 https://up.codes/viewer/mississippi/ibc-2024/chapter/17/special-inspections-and-tests#1707.1:~:text=the%20building%20official%20shall%20make%2C%20or%20cause%20to%20be%20made%2C%20the%20necessary%20tests%20and%20investigations%3B%20or%20the%20building%20official%20shall%20accept%20duly%20authenticated%20reports%20from%20approved%20agencies%20in%20respect%20to%20the%20quality%20and%20manner%20of%20use%20of%20new%20materials%20or%20assemblies%20as%20provided%20for%20in%20Section%20104.2.3.

9 https://up.codes/viewer/mississippi/ibc-2024/chapter/17/special-inspections-and-tests#1703.4.2

10 https://up.codes/viewer/mississippi/ibc-2024/chapter/2/definitions#approved_agency

11 https://up.codes/viewer/mississippi/ibc-2024/chapter/2/definitions#approved_source

12 https://www.law.cornell.edu/uscode/text/18/1832 (b) Any organization that commits any offense described in subsection (a) shall be fined not more than the greater of $5,000,000 or 3 times the value of the stolen trade secret to the organization, including expenses for research and design and other costs of reproducing the trade secret that the organization has thereby avoided. The federal government and each state have a public records act. To follow DTSA and comply state public records and trade secret legislation requires approval through ANAB ISO/IEC 17065 accredited certification bodies or approved sources. For more information, please review this website: Intellectual Property and Trade Secrets.

13 https://www.nspe.org/resources/issues-and-advocacy/professional-policies-and-position-statements/regulation-professional AND https://apassociation.org/list-of-engineering-boards-in-each-state-archive/

14 https://www.cbitest.com/accreditation/

15 https://up.codes/viewer/mississippi/ibc-2024/chapter/1/scope-and-administration#104.1:~:text=directed%20to%20enforce%20the%20provisions%20of%20this%20code

16 https://up.codes/viewer/mississippi/ibc-2024/chapter/1/scope-and-administration#104.2.3 AND https://up.codes/viewer/mississippi/ibc-2024/chapter/1/scope-and-administration#105.3.1

17 https://up.codes/viewer/mississippi/ibc-2024/chapter/17/special-inspections-and-tests#1707.1

18 https://iaf.nu/en/about-iaf-mla/#:~:text=Once%20an%20accreditation%20body%20is%20a%20signatory%20of%20the%20IAF%20MLA%2C%20it%20is%20required%20to%20recognise%20certificates%20and%20validation%20and%20verification%20statements%20issued%20by%20conformity%20assessment%20bodies%20accredited%20by%20all%20other%20signatories%20of%20the%20IAF%20MLA%2C%20with%20the%20appropriate%20scope

19 True for all ANAB accredited product evaluation agencies and all International Trade Agreements.

20 https://www.justice.gov/crt/deprivation-rights-under-color-law AND https://www.justice.gov/atr/mission

21 Unless otherwise noted, the links referenced herein use un-amended versions of the 2024 International Code Council (ICC) 2024 International Code Council (ICC) model codes as foundation references. Mississippi versions of the IBC 2024 and the IRC 2024 are un-amended. This material, product, design, service and/or method of construction also complies with the 2000-2012 versions of the referenced codes and the standards referenced therein. As pertinent to this technical and code compliance evaluation, CBI and/or DrJ staff have reviewed any state or local regulatory amendments to assure this report is in compliance.

22 See Adoptions by Publisher for the latest adoption of a non-amended or amended model code by the local jurisdiction. https://up.codes/codes/general

23 See Adoptions by Publisher for the latest adoption of a non-amended or amended model code by state. https://up.codes/codes/general

24 https://www.ecfr.gov/current/title-24/subtitle-B/chapter-XX/part-3282/subpart-A/section-3282.14

25 https://www.ecfr.gov/current/title-24/subtitle-B/chapter-XX/part-3280

26 All references to the FBC-B and FBC-R are the same as the 2024 IBC and 2024 IRC unless otherwise noted in the Florida Supplement at the end of this report.

27 https://www.ecfr.gov/current/title-24/subtitle-B/chapter-XX/part-3280#p-3280.2(Listed%20or%20certified); https://up.codes/viewer/mississippi/ibc-2024/chapter/2/definitions#listed AND https://up.codes/viewer/mississippi/ibc-2024/chapter/2/definitions#labeled

28 2021 IRC Section R316.4

29 2021 IRC Section R316.4

30 2018 IRC Appendix K

31 https://up.codes/viewer/mississippi/ibc-2024/chapter/17/special-inspections-and-tests#1703.4

Information contained in this report was developed using report holder's confidential intellectual property (IP) and trade secrets (TS), which is protected by Defend Trade Secrets Act 2016, © DrJ Engineering, LLC

32 https://www.ecfr.gov/current/title-24/subtitle-B/chapter-XX/part-3280#:~:text=All%20construction%20methods%20shall%20be%20in%20conformance%20with%20accepted%20engineering%20practices%20to%20insure%20durable%2C%20livable%2C%20and%20safe%20housing%20and%20shall%20demonstrate%20acceptable%20workmanship%20reflecting%20journeyman%20quality%20of%20work%20of%20the%20various%20trades

33 https://www.ecfr.gov/current/title-24/subtitle-B/chapter-XX/part-3280#:~:text=The%20strength%20and%20rigidity%20of%20the%20component%20parts%20and/or%20the%20integrated%20structure%20shall%20be%20determined%20by%20engineering%20analysis%20or%20by%20suitable%20load%20tests%20to%20simulate%20the%20actual%20loads%20and%20conditions%20of%20application%20that%20occur

34 Qualification is performed by a legislatively defined Accreditation Body. ANSI National Accreditation Board (ANAB) is the largest independent accreditation body in North America and provides services in more than 75 countries. DrJ is an ANAB accredited product certification body.

35 https://anabpd.ansi.org/Accreditation/product-certification/AllDirectoryDetails?prgID=1&orgID=2125&statusID=4#:~:text=Bill%20Payment%20Date-,Accredited%20Scopes,-13%20ENVIRONMENT.%20HEALTH

36 2018 IBC Section 1908.1

37 See Code of Federal Regulations (CFR) Title 24 Subtitle B Chapter XX Part 3280 for definition: https://www.ecfr.gov/current/title-24/subtitle-B/chapter-XX/part-3280

38 2021 IBC Section 104.11

39 2021 IRC Section R104.11

40 2018: https://up.codes/viewer/wyoming/ifc-2018/chapter/1/scope-and-administration#104.9 AND 2021: https://up.codes/viewer/wyoming/ibc-2021/chapter/1/scope-and-administration#104.11

41 Approved is an adjective that modifies the noun after it. For example, Approved Agency means that the Agency is accepted officially as being suitable in a particular situation. This example conforms to IBC/IRC/IFC Section 201.4 (https://up.codes/viewer/mississippi/ibc-2024/chapter/2/definitions#201.4) where the building code authorizes sentences to have an ordinarily accepted meaning such as the context implies.

42 https://up.codes/viewer/mississippi/ibc-2024/chapter/17/special-inspections-and-tests#1707.1

43 Multilateral approval is true for all ANAB accredited product evaluation agencies and all International Trade Agreements.

Information contained in this report was developed using report holder's confidential intellectual property (IP) and trade secrets (TS), which is protected by Defend Trade Secrets Act 2016, © DrJ Engineering, LLC